19-3050; Rev 1; 6/04

MAXIM

低成本、单声道/立体声、1.4W差分音频功率放大器

MAX9718/MAX9719

概述

MAX9718/MAX9719是差分输入音频功率放大器，适用于内置扬声器的便携式音频设备。差分输入结构改善了噪声抑制能力，并提供共模抑制。桥接负载 (BTL)结构在提供高品质音频功率放大的同时，大大减少了外部元件数。MAX9718是单通道放大器，而 MAX9719是用于立体声系统的双通道放大器。采用 +5V单电源供电时，这两款器件的每个通道都能以小于 1%的 THD+N向 4Ω负载输出 1.4W的连续平均功率。这些器件既可以提供增益可调的放大器，也可以提供 0dB、3dB和 6dB的内部固定增益，以减少元件数目。

关断输入可以禁用偏置电压发生器和放大器，使静态电流损耗降低到 100nA以内。MAX9718的关断输入可以设定为高电平有效或低电平有效。这些器件具有 Maxim完备的杂音抑制电路，可以降低启动和关断过程的咔嗒声或噼噗声。

MAX9718与 LM4895引脚兼容，提供 9焊球 UCSP™，10引脚 TDFN和 10引脚 μMAX®封装。MAX9719提供 16引脚 TQFN、16引脚 TSSOP和 16焊球 UCSP封装。这些器件都工作在 -40°C至 +85°C扩展温度范围。

应用

移动电话

PDA

便携式装置

特性

- 2.7V至 5.5V单电源供电
- 高 PSRR，217Hz时 -93dB
- 以1%的 THD+N为 4Ω负载提供1.4W功率 (每通道)
- 差分输入
- 内部固定增益，可以减少元件数目
- 可调增益选择 (MAX9718A/MAX9719A)
- 100nA低功耗关断模式
- 上电/断电时无咔嗒声或噼噗声
- 与 LM4895引脚兼容的升级产品 (MAX9718D)

定购信息

PART	TEMP RANGE	PIN-PACKAGE	GAIN (dB)
MAX9718AEBL-T	-40°C to +85°C	3 x 3 UCSP	Adj
MAX9718AETB	-40°C to +85°C	10 TDFN-EP*	Adj
MAX9718AEUB	-40°C to +85°C	10 μMAX-EP*	Adj

*EP = Exposed paddle.

定购信息的后续部分在本资料的最后给出。

引脚配置在本资料的最后给出。

UCSP是 Maxim Integrated Products, Inc.的商标。
μMAX是 Maxim Integrated Products, Inc.的注册商标。

原理框图

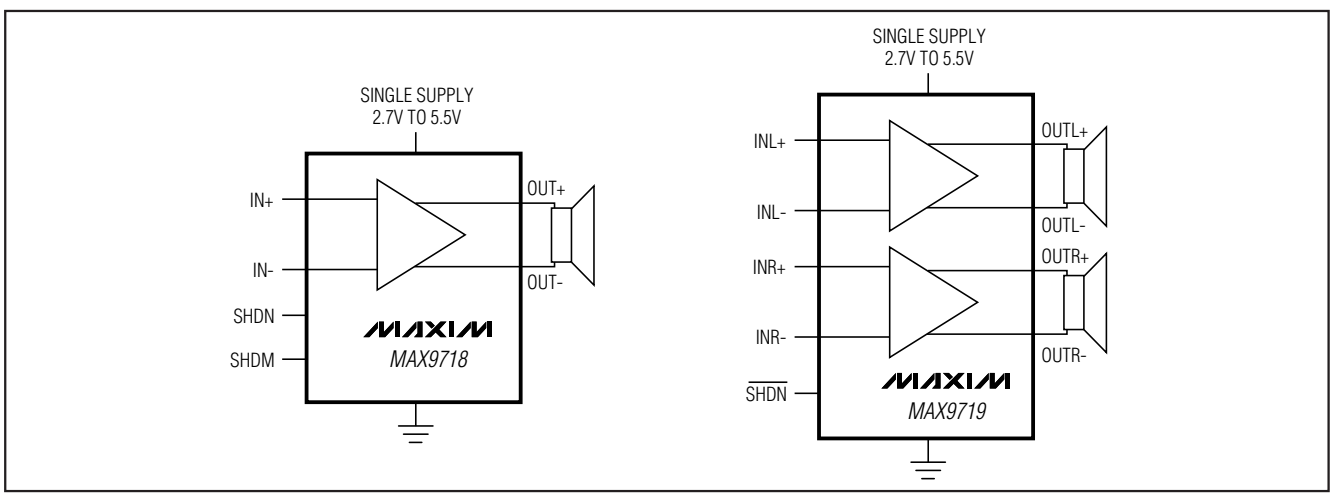

本文是 Maxim正式英文资料的译文，Maxim不对翻译中存在的差异或由此产生的错误负责。请注意译文中可能存在文字组织或翻译错误，如需确认任何词语的准确性，请参考 Maxim提供的英文版资料。
索取免费样品和最新版的数据资料，请访问 Maxim的主页：www.maxim-ic.com.cn。

ABSOLUTE MAXIMUM RATINGS

Supply Voltage (V_{CC} to GND) .....-0.3V to +6V
Any Other Pin to GND .....-0.3V to (V_{CC} + 0.3V)
IN_, BIAS, SHDM, SHDN, $\overline{SHDN}$ Continuous Current 20mA
OUT_ Short-Circuit Duration to GND or V_{CC} .....Continuous
Continuous Power Dissipation (T_A = +70°C)
9-Bump UCSP (derate 5.2mW/°C above +70°C).....412mW
10-Pin TDFN (derate 24.4mW/°C above +70°C) 1951mW
10-Pin µMAX (derate 10.3mW/°C above +70°C).....825mW
16-Bump UCSP (derate 8.2mW/°C above +70°C) 659mW
16-Pin TQFN (derate 16.9mW/°C above +70°C) 1349mW
16-Pin TSSOP (derate 21.3mW/°C above +70°C) 1702mW

Operating Temperature Range .....-40°C to +85°C
Junction Temperature .....+150°C
Storage Temperature Range .....-65°C to +150°C
Bump Temperature (soldering) Reflow.....+235°C
Lead Temperature (soldering, 10s) .....+300°C

Stresses beyond those listed under "Absolute Maximum Ratings" may cause permanent damage to the device. These are stress ratings only, and functional operation of the device at these or any other conditions beyond those indicated in the operational sections of the specifications is not implied. Exposure to absolute maximum rating conditions for extended periods may affect device reliability.

ELECTRICAL CHARACTERISTICS—5V Supply

V_{CC} = 5V, GND = 0, SHDN/$\overline{SHDN}$ = V_{CC} (MAX9718/MAX9719), SHDM = GND (MAX9718), R_{IN} = R_F = 10kΩ (MAX971_A), T_A = +25°C. C_{BIAS} = 0.1µF, no load. Typical values are at T_A = +25°C, unless otherwise noted.) (Note 1)

PARAMETER	SYMBOL	CONDITIONS		MIN	TYP	MAX	UNITS
Supply Voltage	V_{CC}			2.7		5.5	V
Supply Current	I_{CC}	V_{IN-} = V_{IN+} = V_{BIAS}, T_A = -40°C to +85°C, per amplifier (Note 2)			5.0	7.5	mA
Shutdown Supply Current	I_{SHDN}	SHDN = SHDM = $\overline{SHDN}$ = GND, per amplifier			0.1	1	µA
$\overline{SHDN}$, SHDN, SHDM Threshold	V_{IH}			0.7 x V_{CC}			V
	V_{IL}					0.3 x V_{CC}	
Common-Mode Bias Voltage	V_{BIAS}	(Note 3)		V_{CC}/2 - 5%	V_{CC}/2	V_{CC}/2 + 5%	V
Output Offset Voltage	V_{OS}	V_{IN-} = V_{IN+} = V_{BIAS}	A_V = 0dB, MAX971_A, MAX971_B		±1	±10	mV
			A_V = 3dB, MAX971_C		±1	±15	
			A_V = 6dB, MAX971_D		±1	±20	
Common-Mode Input Voltage	V_{IC}	Inferred from CMRR test	A_V = 0dB, MAX971_B	0.5		V_{CC} - 0.5	V
			A_V = 3dB, MAX971_C	0.5		V_{CC} - 0.6	
			A_V = 6dB, MAX971_D	0.5		V_{CC} - 0.8	
		External gain, MAX971_A		0.5		V_{CC} - 1.2	
Input Impedance	R_{IN}	MAX971_B, MAX971_C, MAX971_D		10	15	20	kΩ
Common-Mode Rejection Ratio	CMRR			-50	-60		dB
		f_n = 1kHz			-60		
Power-Supply Rejection Ratio	PSRR	V_{IN-} = V_{IN+} = V_{BIAS}, V_{RIPPLE} = 200mV_{P-P}, R_L = 8Ω, C_{BIAS} = 1µF	f = 217Hz		-93		dB
			f = 1kHz		-90		
Output Power	P_{OUT}	THD+N = 1%, f_{IN} = 1kHz (Note 4)	R_L = 8Ω	0.8	1.1		W
			R_L = 4Ω		1.4		
Total Harmonic Distortion Plus Noise	THD+N	R_L = 8Ω, f_{IN} = 1kHz, P_{OUT} = 0.75W, V_{CC} = 5V, A_V = 6dB (Note 5)			0.002		%

ELECTRICAL CHARACTERISTICS—5V Supply (continued)

V_{CC} = 5V, GND = 0, SHDN/$\overline{SHDN}$ = V_{CC} (MAX9718/MAX9719), SHDM = GND (MAX9718), R_{IN} = R_F = 10kΩ (MAX971_A), T_A = +25°C. C_{BIAS} = 0.1µF, no load. Typical values are at T_A = +25°C, unless otherwise noted.) (Note 1)

PARAMETER	SYMBOL	CONDITIONS	MIN	TYP	MAX	UNITS
Gain Accuracy		MAX971_B/MAX971_C/MAX971_D			±1	%
Channel-to-Channel Gain Matching		MAX9719B/MAX9719C/MAX9719D			±1	%
Signal-to-Noise Ratio	SNR	P_{OUT} = 1W, R_L = 8Ω		-104		dB
Thermal-Shutdown Threshold				+160		°C
Thermal-Shutdown Hysteresis				15		°C
Maximum Capacitive Drive	C_{LOAD}	Bridge-tied capacitance		500		pF
Power-Up/Enable from Shutdown Time	t_{PU}			10		ms
Shutdown Time	t_{SHDN}			3.5		µs
Turn-Off Transient	V_{POP}	(Note 6)		50		mV
Crosstalk		MAX9719, f_{IN} = 1kHz		-85		dB

ELECTRICAL CHARACTERISTICS—3V Supply

V_{CC} = 3V, GND = 0, SHDN/$\overline{SHDN}$ = V_{CC} (MAX9718/MAX9719), SHDM = GND (MAX9718), R_{IN} = R_F = 10kΩ (MAX971_A), T_A = +25°C. C_{BIAS} = 0.1µF, no load. Typical values are at T_A = +25°C, unless otherwise noted.) (Note 1)

PARAMETER	SYMBOL	CONDITIONS		MIN	TYP	MAX	UNITS
Supply Current	I_{CC}	V_{IN-} = V_{IN+} = V_{BIAS}, T_A = -40°C to +85°C, per amplifier (Note 2)			3.8	6.0	mA
Shutdown Supply Current	I_{SHDN}	SHDN = SHDM = $\overline{SHDN}$ = GND, per amplifier			0.1	1	µA
$\overline{SHDN}$, SHDN, SHDM Threshold	V_{IH}			0.7 x V_{CC}			V
	V_{IL}					0.3 x V_{CC}	
Common-Mode Bias Voltage	V_{BIAS}	(Note 3)		V_{CC}/2 - 5%	V_{CC}/2	V_{CC}/2 + 5%	V
Output Offset Voltage	V_{OS}	V_{IN-} = V_{IN+} = V_{BIAS}	A_V = 0dB, MAX971_A/ MAX971_B		±1	±10	mV
			A_V = 3dB, MAX971_C		±1	±15	
			A_V = 6dB, MAX971_D		±1	±20	
Common-Mode Input Voltage	V_{IC}	Inferred from CMRR test	A_V = 0dB, MAX971_B	0.5		V_{CC} - 0.7	V
			A_V = 3dB, MAX971_C	0.5		V_{CC} - 0.8	
			A_V = 6dB, MAX971_D	0.5		V_{CC} - 1.0	
		External gain, MAX971_A		0.5		V_{CC} - 1.2	
Input Impedance	R_{IN}	MAX971_B/MAX971_C/MAX971_D		10	15	20	kΩ
Common-Mode Rejection Ratio	CMRR			-50	-60		dB
		f_N = 1kHz			-70		
Power-Supply Rejection Ratio	PSRR	V_{IN-} = V_{IN+} = V_{BIAS}, V_{RIPPLE} = 200mV_{P-P}, R_L = 8Ω, C_{BIAS} = 1µF	f = 217Hz		-93		dB
			f = 1kHz		-90		

低成本、单声道/立体声、1.4W差分音频功率放大器

ELECTRICAL CHARACTERISTICS—3V Supply (continued)

V_{CC} = 3V, GND = 0, SHDN/$\overline{SHDN}$ = V_{CC} (MAX9718/MAX9719), SHDM = GND (MAX9718), R_{IN} = R_F = 10kΩ (MAX971_A), T_A = +25°C. C_{BIAS} = 0.1µF, no load. Typical values are at T_A = +25°C, unless otherwise noted.) (Note 1)

PARAMETER	SYMBOL	CONDITIONS	MIN	TYP	MAX	UNITS
Output Power	P_{OUT}	R_L = 8Ω, THD+N = 1%, f_{IN} = 1kHz (Note 4)		475		mW
Total Harmonic Distortion Plus Noise	THD+N	R_L = 8Ω, f_{IN} = 1kHz, P_{OUT} = 0.25W, A_V = 6dB		0.003		%
Thermal-Shutdown Threshold				+160		°C
Thermal-Shutdown Hysteresis				15		°C
Maximum Capacitive Drive	C_{LOAD}	Bridge-tied capacitance		500		pF
Power-Up/Enable from Shutdown Time	t_{PU}			10		ms
Shutdown Time	t_{SHDN}			3		µs
Turn-Off Transient	V_{POP}	(Note 6)		40		mV
Crosstalk		MAX9719, f_N = 1kHz		-85		dB

Note 1: All specifications are 100% tested at T_A = +25°C. Specifications over temperature (T_A = T_{MIN} to T_{MAX}) are guaranteed by design, not production tested.
Note 2: Quiescent power-supply current is specified and tested with no load. Quiescent power-supply current depends on the offset voltage when a practical load is connected to the amplifier. Guaranteed by design.
Note 3: Common-mode bias voltage is the voltage on BIAS and is nominally V_{CC}/2.
Note 4: Output power is specified by a combination of a functional output current test and characterization analysis.
Note 5: Measurement bandwidth for THD+N is 22Hz to 22kHz.
Note 6: Peak voltage measured at power-on, power-off, into or out of SHDN. Bandwidth defined by A-weighted filters, inputs at AC GND. V_{CC} rise and fall times greater than or equal to 1ms.

典型工作特性

(V_{CC} = 5V, C_{BIAS} = 0.1µF, THD+N measurement bandwidth = 22Hz to 22kHz, T_A = +25°C, unless otherwise noted.)

TOTAL HARMONIC DISTORTION + NOISE vs. FREQUENCY

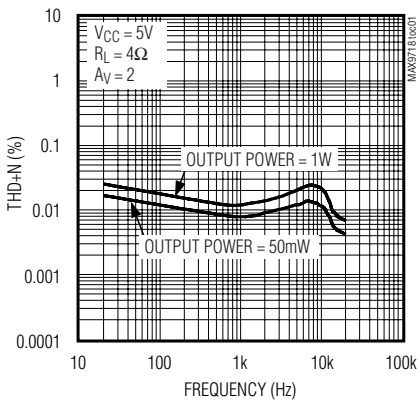

TOTAL HARMONIC DISTORTION + NOISE vs. FREQUENCY

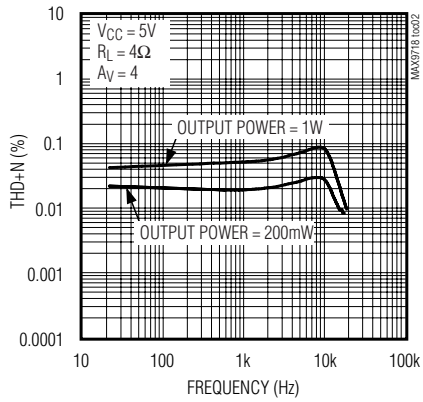

TOTAL HARMONIC DISTORTION + NOISE vs. FREQUENCY

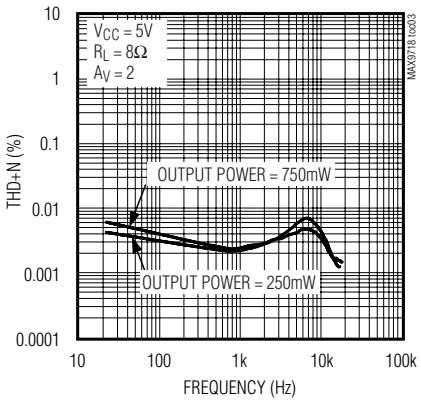

典型工作特性 (续)

(V_{CC} = 5V, C_{BIAS} = 0.1µF, THD+N measurement bandwidth = 22Hz to 22kHz, T_A = +25°C, unless otherwise noted.)

TOTAL HARMONIC DISTORTION + NOISE vs. FREQUENCY

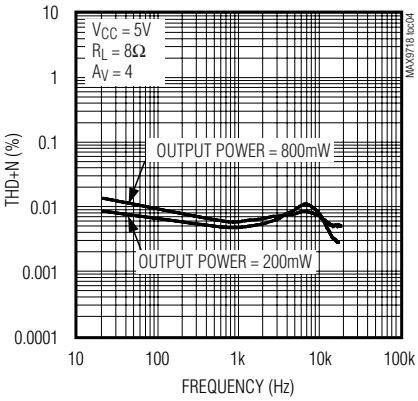

TOTAL HARMONIC DISTORTION + NOISE vs. FREQUENCY

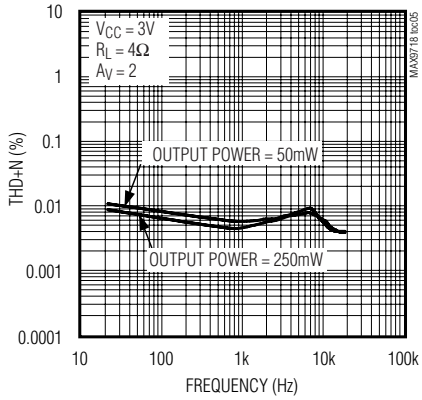

TOTAL HARMONIC DISTORTION + NOISE vs. FREQUENCY

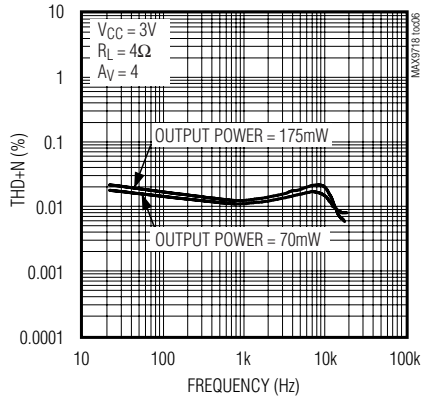

TOTAL HARMONIC DISTORTION + NOISE vs. FREQUENCY

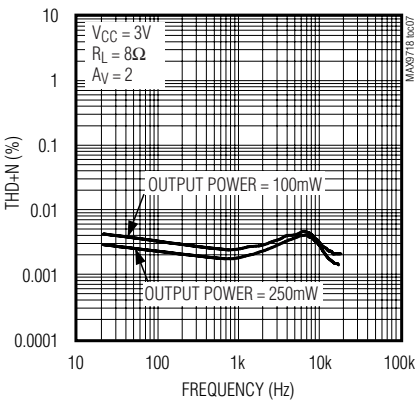

TOTAL HARMONIC DISTORTION + NOISE vs. FREQUENCY

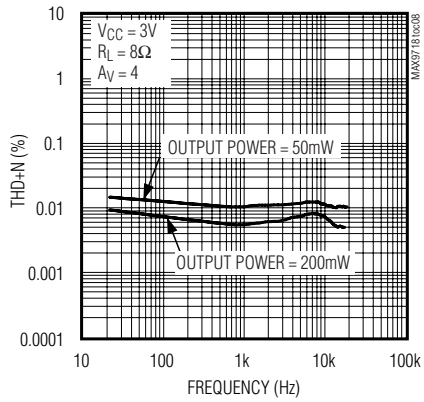

TOTAL HARMONIC DISTORTION + NOISE vs. OUTPUT POWER

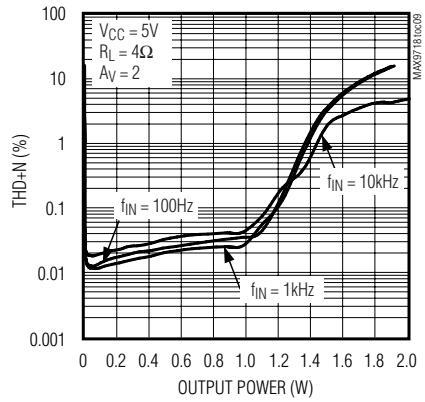

TOTAL HARMONIC DISTORTION + NOISE vs. OUTPUT POWER

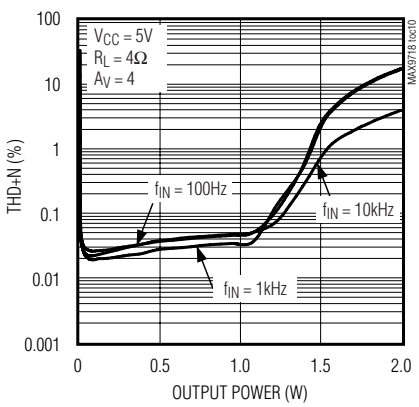

TOTAL HARMONIC DISTORTION + NOISE vs. OUTPUT POWER

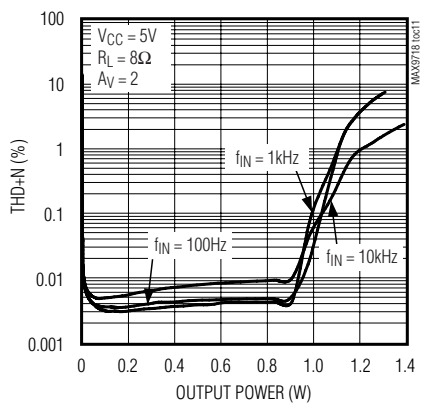

TOTAL HARMONIC DISTORTION + NOISE vs. OUTPUT POWER

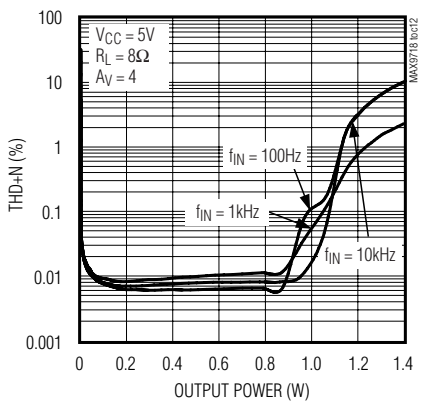

低成本、单声道/立体声、1.4W差分音频功率放大器

典型工作特性 (续)

(V_{CC} = 5V, C_{BIAS} = 0.1µF, THD+N measurement bandwidth = 22Hz to 22kHz, T_A = +25°C, unless otherwise noted.)

TOTAL HARMONIC DISTORTION + NOISE vs. OUTPUT POWER

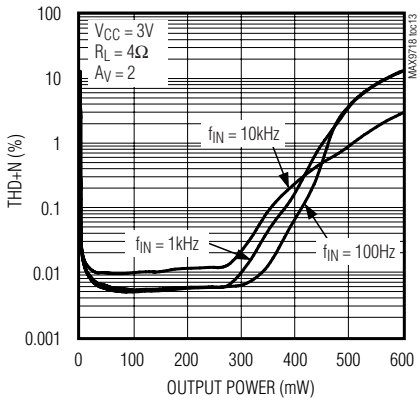

TOTAL HARMONIC DISTORTION + NOISE vs. OUTPUT POWER

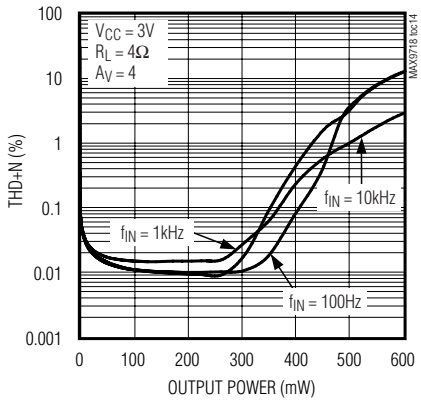

TOTAL HARMONIC DISTORTION + NOISE vs. OUTPUT POWER

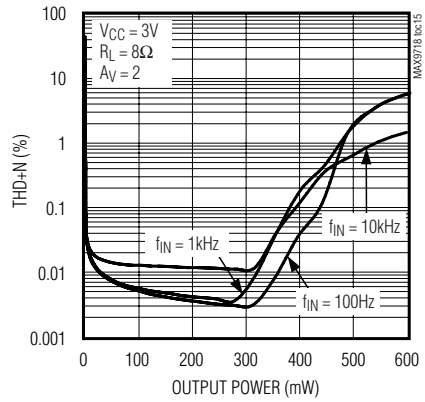

TOTAL HARMONIC DISTORTION + NOISE vs. OUTPUT POWER

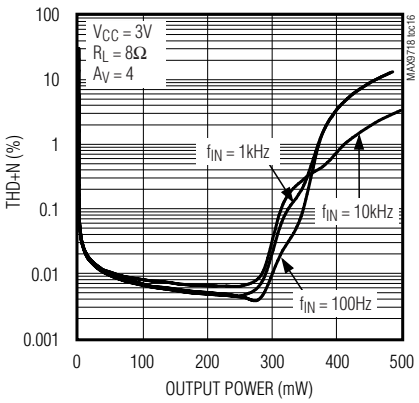

TOTAL HARMONIC DISTORTION + NOISE vs. COMMON-MODE VOLTAGE

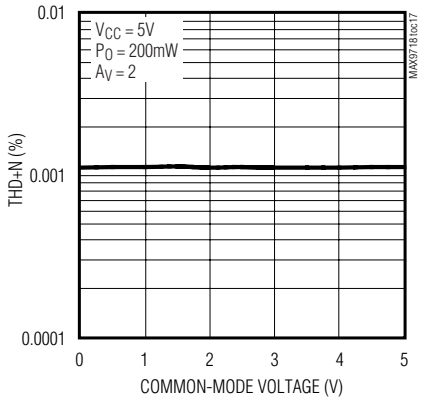

TOTAL HARMONIC DISTORTION + NOISE vs. COMMON-MODE VOLTAGE

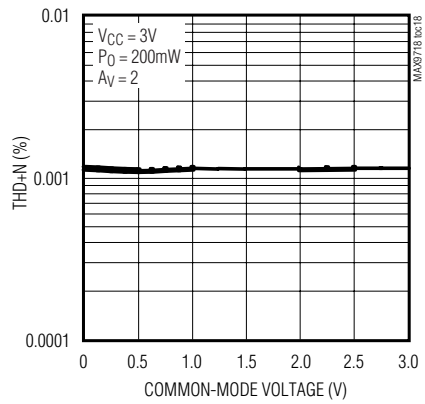

OUTPUT POWER vs. SUPPLY VOLTAGE

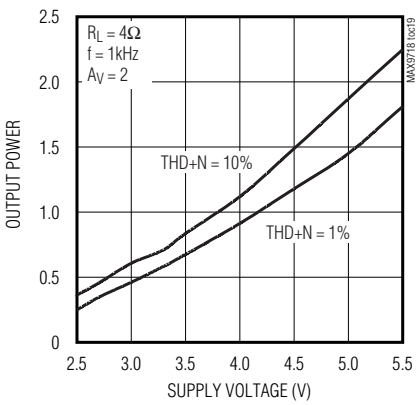

OUTPUT POWER vs. SUPPLY VOLTAGE

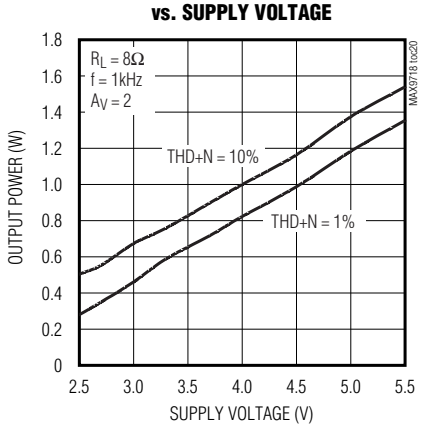

OUTPUT POWER vs. LOAD RESISTANCE

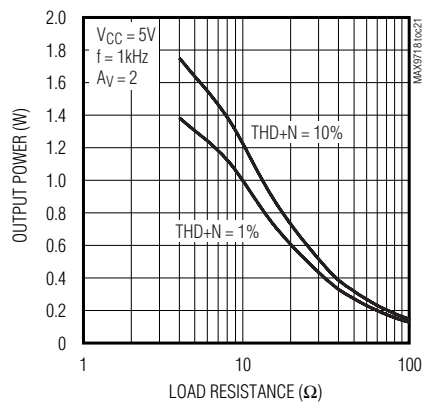

典型工作特性 (续)

(V_{CC} = 5V, C_{BIAS} = 0.1µF, THD+N measurement bandwidth = 22Hz to 22kHz, T_A = +25°C, unless otherwise noted.)

OUTPUT POWER vs. LOAD RESISTANCE

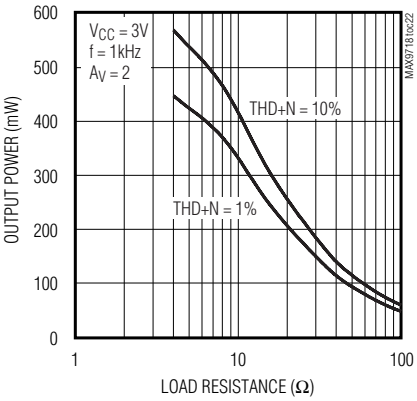

POWER DISSIPATION vs. OUTPUT POWER

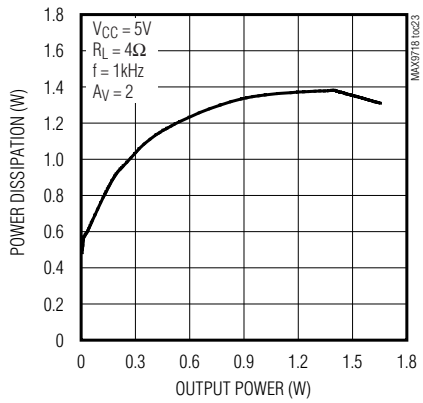

POWER DISSIPATION vs. OUTPUT POWER

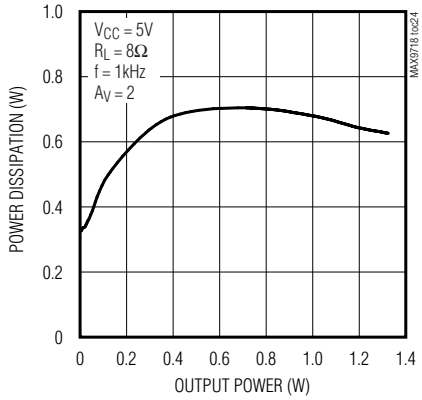

POWER DISSIPATION vs. OUTPUT POWER

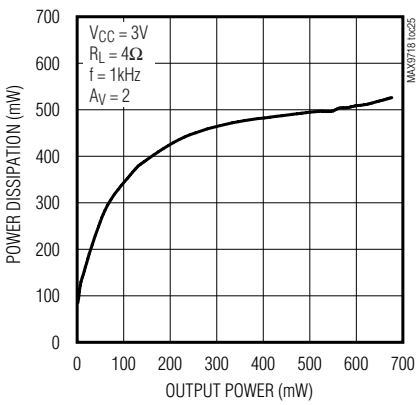

POWER DISSIPATION vs. OUTPUT POWER

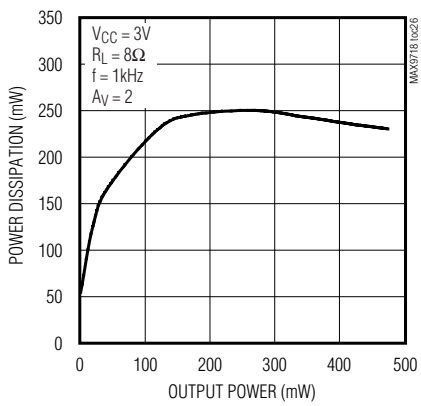

GAIN AND PHASE vs. FREQUENCY

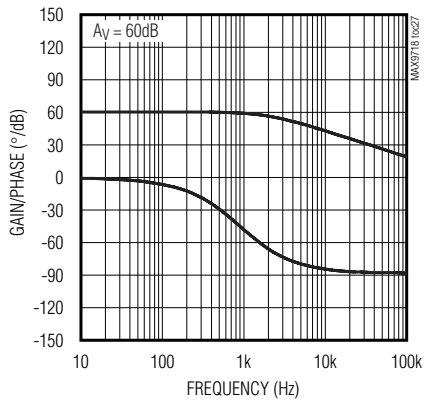

POWER-SUPPLY REJECTION RATIO vs. FREQUENCY

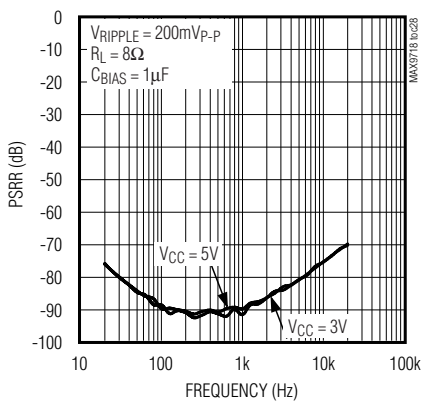

COMMON-MODE REJECTION RATIO vs. FREQUENCY

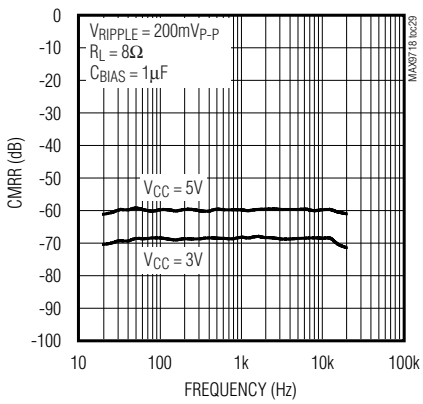

低成本、单声道/立体声、1.4W差分音频功率放大器

典型工作特性 (续)

(V_{CC} = 5V, C_{BIAS} = 0.1µF, THD+N measurement bandwidth = 22Hz to 22kHz, T_A = +25°C, unless otherwise noted.)

CROSSTALK vs. FREQUENCY

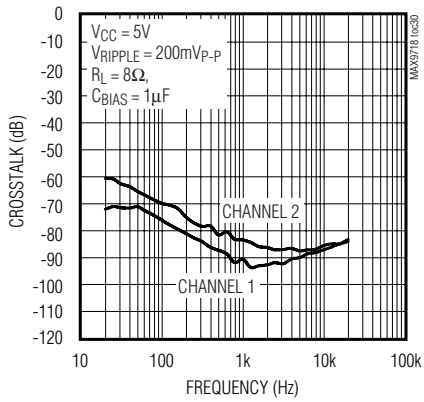

CROSSTALK vs. FREQUENCY

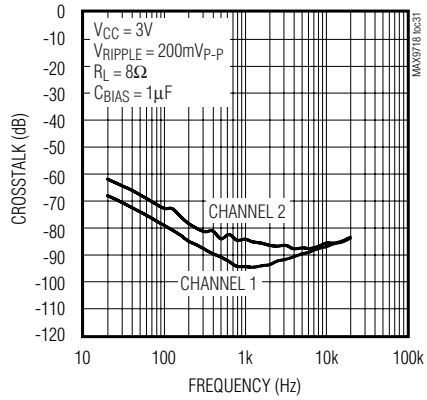

ENTERING SHUTDOWN

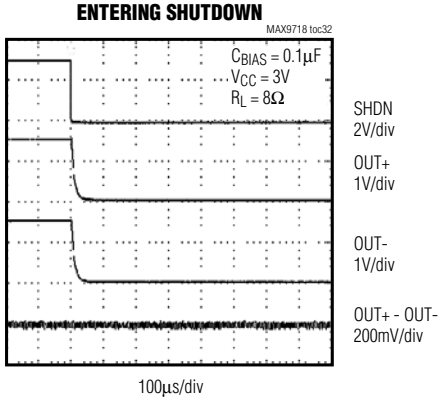

EXITING SHUTDOWN

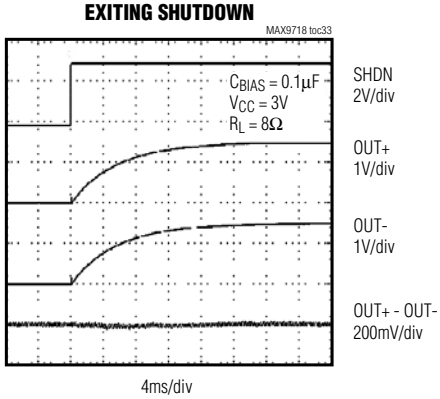

ENTERING POWER-DOWN

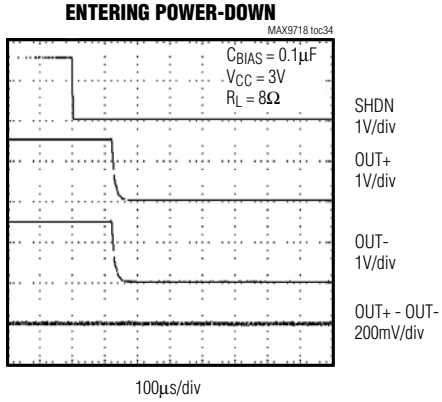

EXITING POWER-DOWN

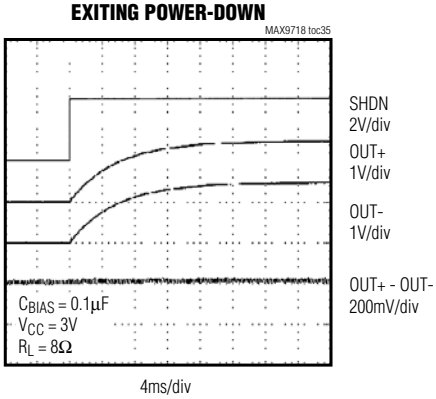

典型工作特性 (续)

(V_{CC} = 5V, C_{BIAS} = 0.1µF, THD+N measurement bandwidth = 22Hz to 22kHz, T_A = +25°C, unless otherwise noted.)

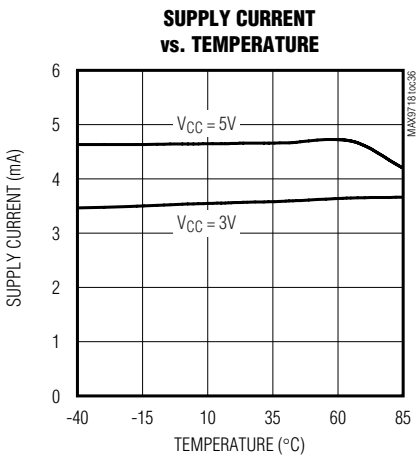

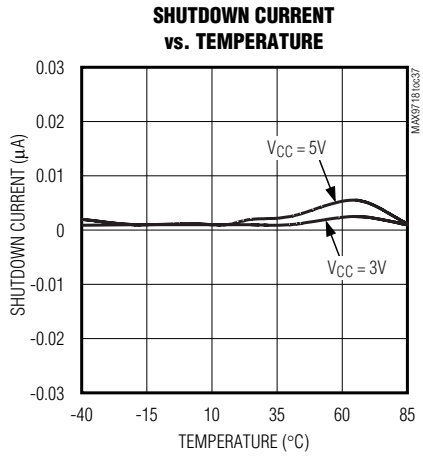

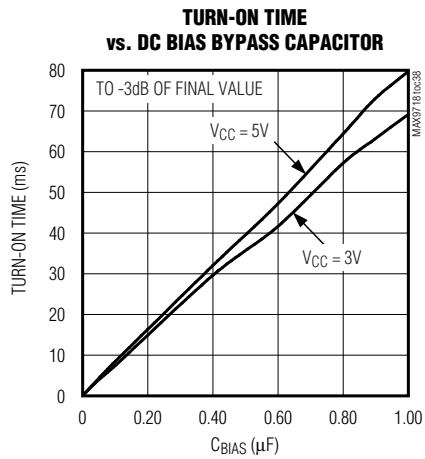

引脚说明

引脚					名称	功能
MAX9718		MAX9719				
TDFN/ µMAX	UCSP	TQFN	UCSP	TSSOP		
1	C2	—	—	—	SHDN	关断输入，SHDN的极性取决于 SHDM的状态。
—	—	9	B3	11	$\overline{SHDN}$	关断输入，低电平有效的关断输入。
2	C1	—	—	—	IN-	反相输入。
3	B2	—	—	—	SHDM	关断模式极性输入，SHDM控制 SHDN的极性。将 SHDM接高电平，得到高电平有效的SHDN输入；将SHDM接低电平，得到低电平有效的 SHDN输入 (见表 1)。
4	A1	—	—	—	IN+	同相输入。
5	A2	5	B2	7	BIAS	直流偏置旁路。
6	A3	—	—	—	OUT-	桥式放大器负输出。
7	B3	1, 6, 11	A2, C2, C4	3, 8,13	GND	地
8	—	13	—	15	N.C.	无连接，内部未连接。
9	B1	8, 14	A4, D3	16, 10	VCC	电源。
10	C3	—	—	—	OUT+	桥式放大器正输出。
—	—	2	C1	4	INR+	右声道同相输入。
—	—	3	B1	5	INL-	左声道反相输入。
—	—	4	A1	6	INL+	左声道同相输入。
—	—	7	A3	9	OUTL+	左声道桥式放大器正输出。
—	—	10	B4	12	OUTL-	左声道桥式放大器负输出。

低成本、单声道/立体声、1.4W差分音频功率放大器

引脚说明 (续)

引脚					名称	功能
MAX9718		MAX9719				
TDFN/ µMAX	UCSP	TQFN	UCSP	TSSOP		
—	—	12	D4	14	OUTR+	右声道桥式放大器正输出。
—	—	15	D2	1	OUTR-	右声道桥式放大器负输出。
—	—	16	D1	2	INR-	右声道反相输入。
EP	—	EP	—	EP	EP	裸露焊盘，将 EP与 GND连接。

详细说明

MAX9718/MAX9719是 1.4W BTL扬声器放大器。MAX9718是单声道扬声器放大器，而 MAX9719是立体声扬声器放大器。两种器件都具有低功耗关断模式和业界领先的杂音抑制功能。MAX9718具有两种关断输入方案，可以分别配置为高电平有效或低电平有效关断。这些器件由高输出电流音频放大器组成，音频放大器配置为 BTL放大器 (见功能框图)。提供可调增益和固定增益 (0dB、3dB、6dB)产品。

偏置

这些器件工作在 2.7V至 5.5V单电源，由内部产生共模偏置电压，该共模偏置电压相对于地电位为 $V_{CC}/2$。偏置电路既提供杂音抑制，也为音频输出设置直流偏置电平。按照“偏置电容”部分的说明选择旁路电容。不要在 BIAS引脚接外部负载，以免影响整体性能。

关断模式

MAX9718/MAX9719具有 100nA低功耗关断模式，可以降低静态电流损耗。进入关断模式后，器件的偏置电路被禁用，放大器输出变为高阻状态，BIAS端被驱动到地电位。MAX9718的 SHDM输入用来控制 SHDN的极性。SHDM为高电平时，SHDN输入为高电平有效；SHDM为低电平时，SHDN输入为低电平有效 (见表 1)。MAX9719具有低电平有效的关断输入$\overline{SHDN}$。

杂音抑制

MAX9718/MAX9719具有 Maxim业界领先的杂音抑制电路。启动过程中，放大器共模偏置电压逐渐上升到直流偏置点。进入关断模式时，放大器输出之间具有 100kΩ的高阻。这种结构大大降低了出现在音频波段的能量。

表 1 关断模式选择 (仅 MAX9718)

SHDM	SHDN	OPERATIONAL MODE
0	0	Shutdown
0	1	Normal operation
1	0	Normal operation
1	1	Shutdown

应用信息

BTL放大器

MAX9718/MAX9719使用差分方式驱动负载，这种配置称为桥接负载或 BTL。BTL配置 (图 1)优于单端配置，单端配置的一个负载端接地。在相同条件下，差分方式驱动负载得到的输出电压是单端放大器的二倍。因此，器件的差分增益是输入放大器闭环增益的二倍。有效增益可以用下列公式计算：

由于输出电压加倍，在下列公式中用 2 x $V_{OUT(P-P)}$替代 $V_{OUT(P-P)}$ 可以得到四倍的输出功率：

$$V_{RMS} = \frac{V_{OUT(P-P)}}{2\sqrt{2}}$$

$$P_{OUT} = \frac{V_{RMS}^2}{R_L}$$

由于差分输出偏置在电源中点，负载两端没有净直流电压。这样就可以省去单端放大器中所需要的隔直电容。这些电容体积大、成本高，既浪费电路板空间，又降低了低频性能。

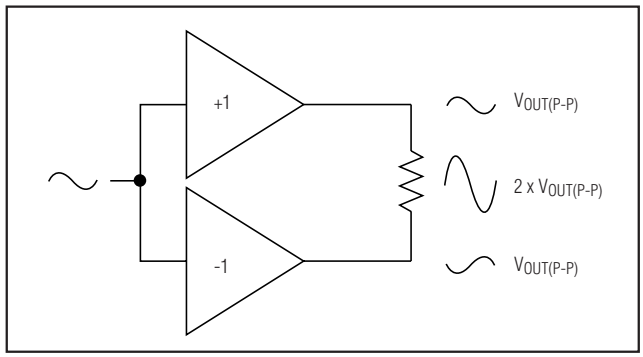

图 1、桥接负载配置

功率耗散与散热

在标准工作条件下，MAX9718/MAX9719可以耗散绝大部分功率，在“极限条件”部分的连续功率耗散中给出了每种封装的*最大功率耗散值*，也可以用以下公式计算：

$$P_{D(MAX)} = \frac{T_{J(MAX)} - T_A}{\theta_{JA}}$$

式中 $T_{J(MAX)}$是 +150°C，T_A是环境温度，θ_{JA}是“极限条件”部分规定的降额系数的倒数，单位为 °C/W。例如，TQFN封装的 θ_{JA}是 +59.2°C/W。

与单端配置相比，BTL配置输出功率的增加直接导致了内部功耗的增加。给定 V_{CC}和负载后，内部功耗的最大值由下式计算：

$$P_{D(MAX)} = \frac{2V_{CC}^2}{\pi^2 R_L}$$

若在给定条件下内部功耗超出了给定封装所允许的最大值，通过增大接地面积、提高散热能力，以及增大器件引线的尺寸 (见“*布线与接地*”部分)可以降低功耗。其他降低功耗的方法有：减小 V_{CC}、增大负载阻抗、降低环境温度、减小增益或减小输入信号等。

热过载保护会限制 MAX9718/MAX9719的总功耗。当结点温度超过 +160°C时，热保护电路将禁用放大器输出级。结点温度下降 15°C后再启动放大器。连续热过载情况下，随着器件升温、降温而产生脉冲输出。

为获得最佳的功率耗散与散热条件，μMAX、TDFN、TQFN和 TSSOP封装上的裸露焊盘应与大面积地层相连。

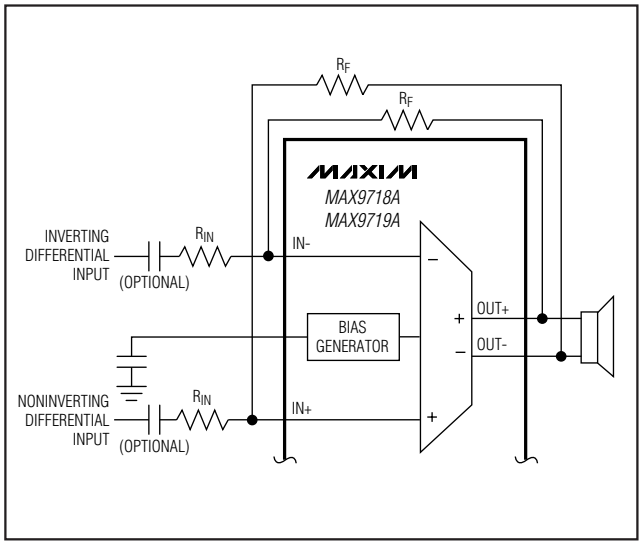

图 2、设置 MAX9718A/MAX9719A的增益

固定差分增益

MAX9718B、MAX9718C、MAX9718D、MAX9719B、MAX9719C和 MAX9719D具有内部固定增益 (见选择指南)。这简化了设计、减小了外形尺寸、并省去了增益设定电阻。*典型工作电路*中的电阻 R1和 R2用来获得每个固定增益。

可调差分增益

增益设置电阻

用外部反馈电阻设置 MAX9718A和 MAX9719A的增益。电阻 R_F和 R_{IN}(图 2)按照下式设置放大器增益：

$$A_V = \frac{R_F}{R_{IN}}$$

式中 AV是所期望的电压增益。于是，R_{IN}取 10kΩ，R_F取 20 kΩ时增益为 2V/V，或 6dB。

R_F可以是固定电阻或可变电阻，允许使用数控电位器在软件控制下改变增益。

低成本、单声道/立体声、1.4W差分音频功率放大器

输入滤波器

全差分放大器的输入可以偏置在电源中点以外的电压。共模反馈电路用来调节输入偏置，确保输出偏置始终保持在电源中点处。只要共模输入电压在“电气特性”表指定的额定工作范围以内，就不需要输入电容。

如果使用了输入电容，输入电容 C_{IN}与 R_{IN}一起构成了高通滤波器，可以消除输入信号中的直流偏置。交流耦合电容允许放大器为信号提供最佳的直流偏置。假定信号源阻抗为 0，高通滤波器的 -3dB点为：

$$f_{-3dB} = \frac{1}{2\pi R_{IN} C_{IN}}$$

如果 f_{-3dB}设置过高，会影响放大器的低频响应。选用具有低电压系数电介质的电容，如钽或铝电解电容。陶瓷电容等高电压系数电容可能会导致低频失真加剧。

BIAS电容

BIAS引脚是内部产生的 $V_{CC}/2$偏置电压的输出端。BIAS旁路电容 C_{BIAS}通过降低电源与共模偏置节点的噪声源可以改善 PSRR和 THD+N性能，并为扬声器放大器提供无杂音的启动直流偏置波形。用 0.1µF电容将 BIAS旁路到 GND。大容值的 C_{BIAS} (高达 1µF)可以改善 PSRR性能，但使 t_{ON}/t_{OFF}时间变慢。1µF C_{BIAS}电容使导通 /关闭时间放慢 10倍，但使 PSRR改善 20dB(1kHz)。BIAS处不要接外部负载。

电源旁路

适当的电源旁路可以确保低噪声、低失真工作，在 V_{CC}与 GND之间接 1µF陶瓷电容。根据具体应用的需求，可以添加额外的大电容。旁路电容应尽可能靠近器件安装。

布线与接地

良好的印刷电路板布线是获得最佳性能的关键。在电源输入和放大器输出端使用宽的引线，以降低由于引线的寄生电阻所引起的损耗，并改善器件的散热。良好的接地可以改善音频性能、减小通道间串扰，并防止数字开关噪声耦合到音频信号中。

MAX9718/MAX9719的 TDFN、TQFN、TSSOP和 µMAX封装的下方都有裸露的散热焊盘。这个焊盘提供从管芯到印刷电路板的直接导热通道，用来降低封装的热阻。如果需要的话，使用多个过孔将裸露焊盘与地层相连。

UCSP应用信息

有关 UCSP的最新应用细节，它的结构、外形尺寸、载带信息、印刷电路板技术、焊球-焊盘布局、推荐的回流焊温度曲线以及可靠性测试结果等最新信息，请参考登载于 Maxim网站：www.maxim-ic.com/ucsp的应用笔记“*UCSP—A Wafer-Level Chip Scale* Package”。

选择指南

PART	MONO	STEREO	GAIN (dB)	SELECTABLE SHUTDOWN POLARITY
MAX9718A	√	—	Adjustable	√
MAX9718B	√	—	0	√
MAX9718C	√	—	3	√
MAX9718D	√	—	6	√
MAX9719A	—	√	Adjustable	—
MAX9719B	—	√	0	—
MAX9719C	—	√	3	—
MAX9719D	—	√	6	—

定购信息 (续)

PART	TEMP RANGE	PIN-PACKAGE	GAIN (dB)
MAX9718BEBL-T	-40°C to +85°C	3 x 3 UCSP	0
MAX9718BETB	-40°C to +85°C	10 TDFN-EP*	0
MAX9718BEUB	-40°C to +85°C	10 µMAX-EP*	0
MAX9718CEBL-T	-40°C to +85°C	3 x 3 UCSP	3
MAX9718CETB	-40°C to +85°C	10 TDFN-EP*	3
MAX9718CEUB	-40°C to +85°C	10 µMAX-EP*	3
MAX9718DEBL-T	-40°C to +85°C	3 x 3 UCSP	6
MAX9718DETB	-40°C to +85°C	10 TDFN-EP*	6
MAX9718DEUB	-40°C to +85°C	10 µMAX-EP*	6
MAX9719AEBE-T	-40°C to +85°C	4 x 4 UCSP	Adj
MAX9719AETE	-40°C to +85°C	16 TQFN-EP*	Adj
MAX9719AEAE	-40°C to +85°C	16 TSSOP-EP*	Adj
MAX9719BEBE-T	-40°C to +85°C	4 x 4 UCSP	0
MAX9719BETE	-40°C to +85°C	16 TQFN-EP*	0
MAX9719BEAE	-40°C to +85°C	16 TSSOP-EP*	0
MAX9719CEBE-T	-40°C to +85°C	4 x 4 UCSP	3
MAX9719CETE	-40°C to +85°C	16 TQFN-EP*	3
MAX9719CEAE	-40°C to +85°C	16 TSSOP-EP*	3
MAX9719DEBE-T	-40°C to +85°C	4 x 4 UCSP	6
MAX9719DETE	-40°C to +85°C	16 TQFN-EP*	6
MAX9719DEAE	-40°C to +85°C	16 TSSOP-EP*	6

*EP = Exposed paddle.

UCSP标记信息

■: A1 Bump indicator

AAA: Product code

XXX: Lot code

芯片信息

MAX9718 TRANSISTOR COUNT: 2359

MAX9719 TRANSISTOR COUNT: 4447

PROCESS: BiCMOS

低成本、单声道/立体声、1.4W差分音频功率放大器

系统框图

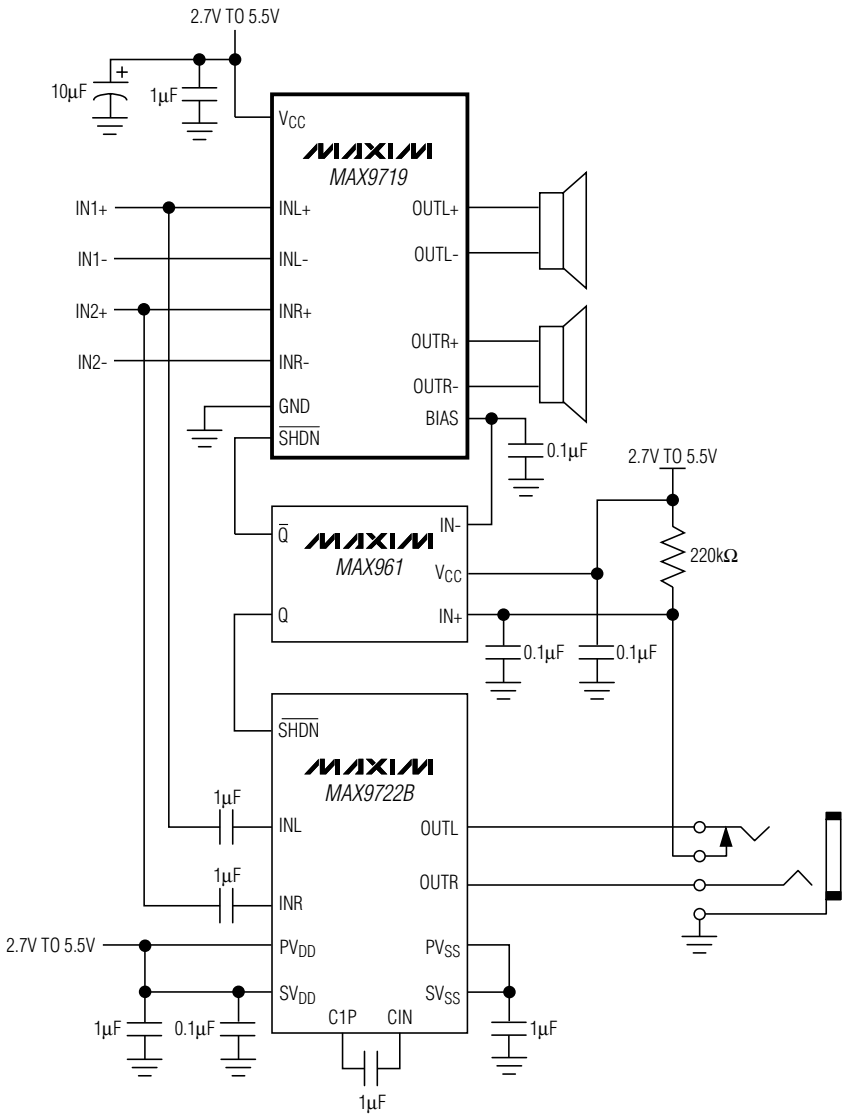

AUTOMATIC HEADPHONE DETECTION AND SPEAKER DISABLE CIRCUIT

功能框图

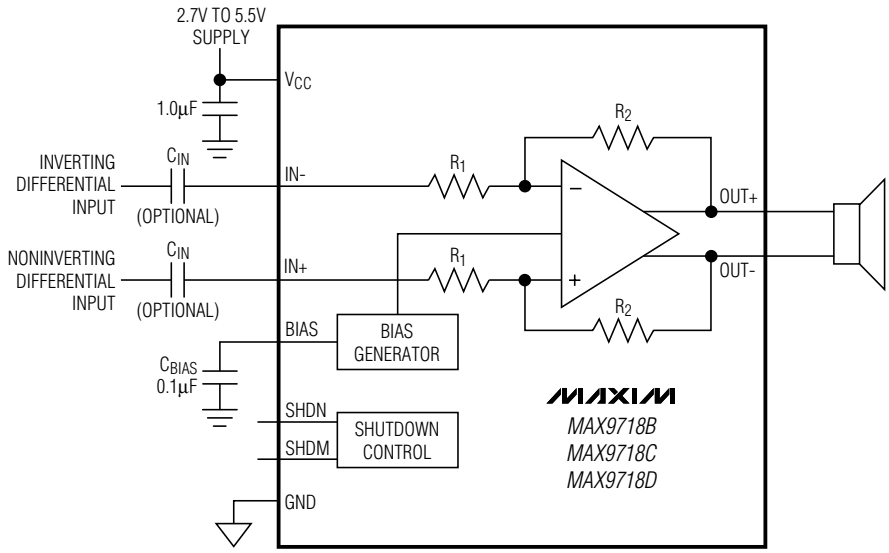
2.7V TO 5.5V
SUPPLY
VCC
1.0µF
INVERTING
DIFFERENTIAL
INPUT
CIN
(OPTIONAL)
IN-
R1
R2
OUT+
NONINVERTING
DIFFERENTIAL
INPUT
CIN
(OPTIONAL)
IN+
R1
R2
OUT-
BIAS
BIAS
GENERATOR
CBIAS
0.1µF
SHDN
SHDM
SHUTDOWN
CONTROL
MAXIM
MAX9718B
MAX9718C
MAX9718D
GND

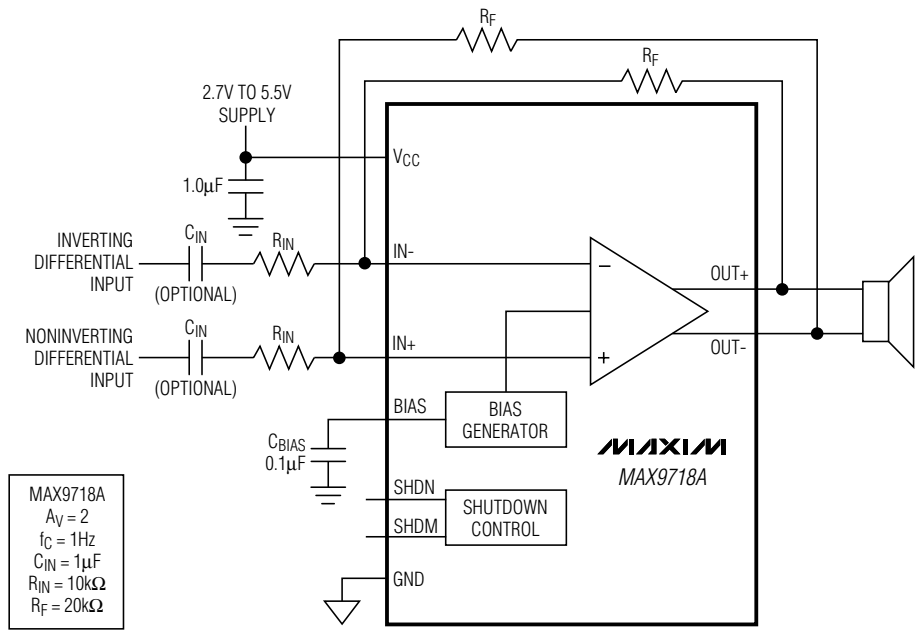
RF
RF
2.7V TO 5.5V
SUPPLY
VCC
1.0µF
INVERTING
DIFFERENTIAL
INPUT
CIN
RIN
(OPTIONAL)
IN-
OUT+
NONINVERTING
DIFFERENTIAL
INPUT
CIN
RIN
(OPTIONAL)
IN+
OUT-
BIAS
BIAS
GENERATOR
CBIAS
0.1µF
MAXIM
MAX9718A
SHDN
SHDM
SHUTDOWN
CONTROL
GND
MAX9718A
AV = 2
fC = 1Hz
CIN = 1µF
RIN = 10kΩ
RF = 20kΩ

低成本、单声道/立体声、1.4W差分音频功率放大器

功能框图 (续)

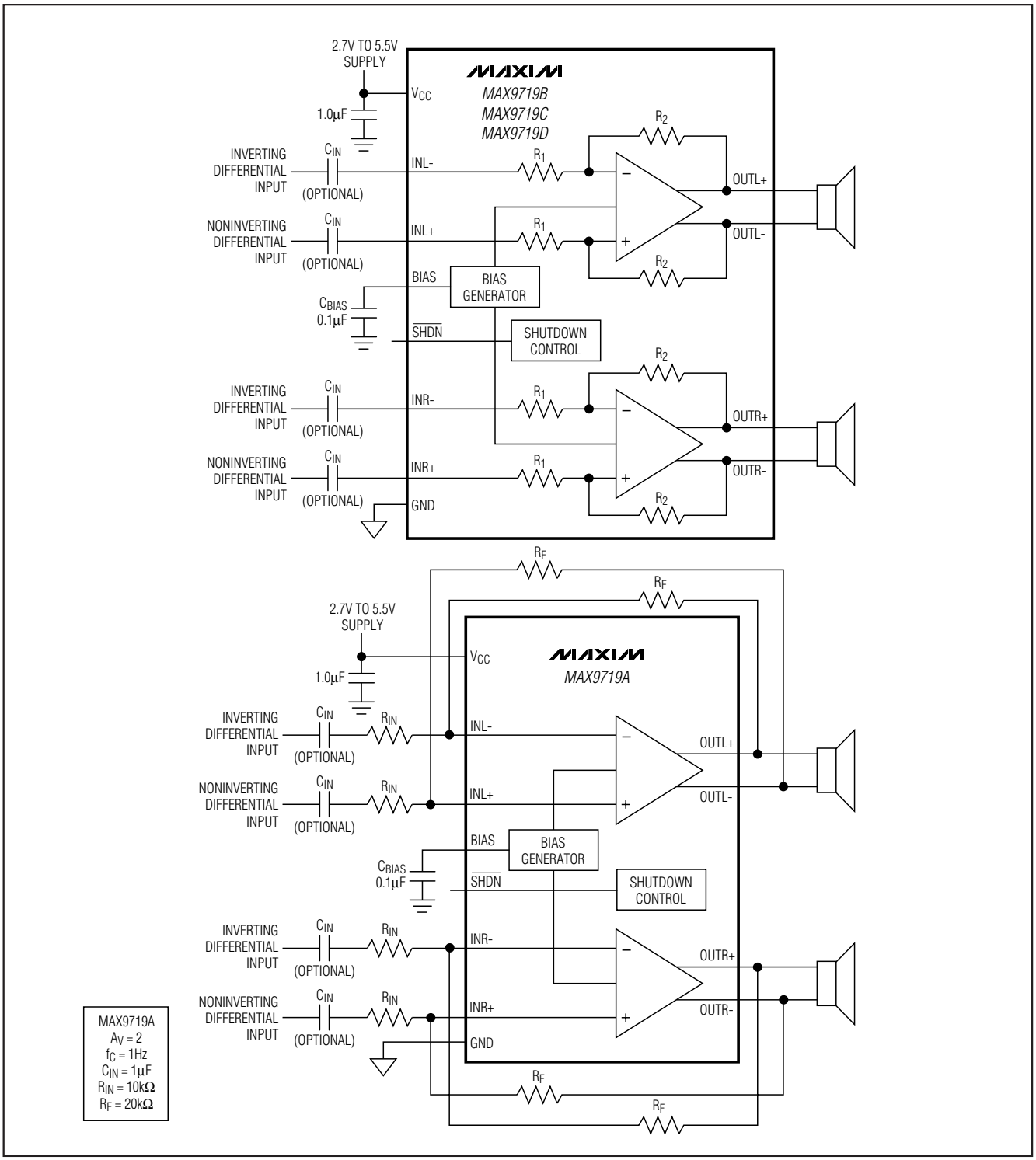

TOP VIEW

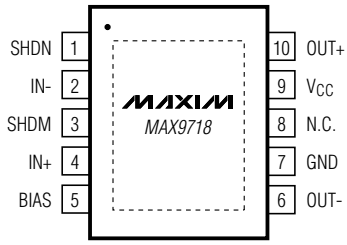

μMAX

TOP VIEW
(BUMPS ON BOTTOM)

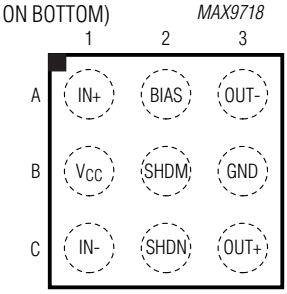

3 × 3 UCSP

TOP VIEW

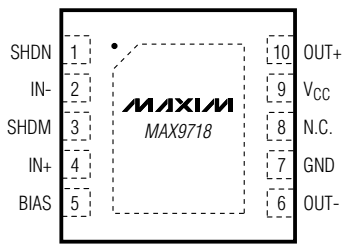

3mm × 3mm × 0.8mm TDFN

TOP VIEW
(BUMPS ON BOTTOM)

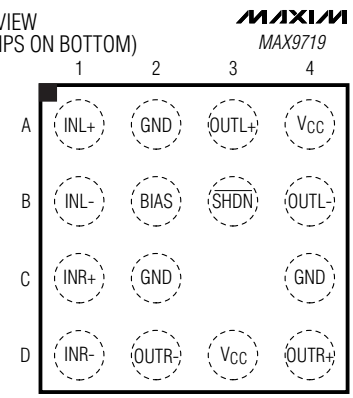

4 × 4 UCSP

TOP VIEW

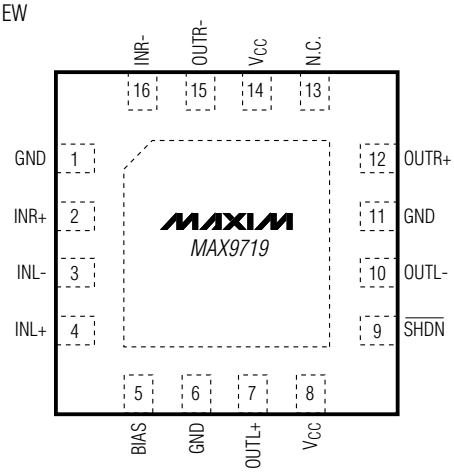

4mm × 4mm × 0.8mm TQFN

TOP VIEW

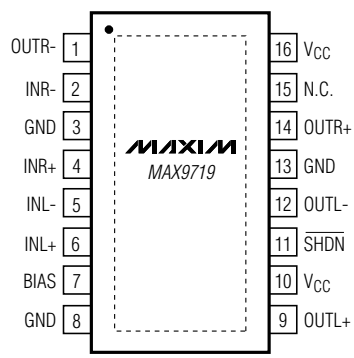

TSSOP-EP

低成本、单声道/立体声、1.4W差分音频功率放大器

封装信息

(本数据资料提供的封装图可能不是最近的规格，如需最近的封装外型信息，请查询 **www.maxim-ic.com/packages**。)

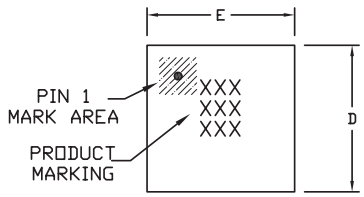

TOP VIEW

COMMON DIMENSIONS	
A	0.62+0.05-0.08
A1	0.29±0.02
A2	0.33 REF.
b	ø0.35±0.03
D1	1.00 BASIC
E1	1.00 BASIC
e	0.50 BASIC
SD	0.00 BASIC
SE	0.00 BASIC

PKG. CODE	VARIABLE DIMENSIONS		DEPOPULATED SOLDER BALLS
	D	E	
B9-1	1.52±0.05	1.52±0.05	NONE
B9-2	1.52±0.05	1.52±0.05	B2
B9-3	1.52±0.05	1.52±0.05	B1, B2, B3
B9-4	1.60±0.05	1.60±0.05	NONE
B9-5	1.60±0.05	1.60±0.05	B2
B9-6	1.60±0.05	1.60±0.05	B1, B2, B3

NOTES:
1. ALL DIMENSIONS ARE IN MILLIMETERS.
2. PRODUCT MARKING: NUMBER OF CHARACTERS AND LINES VARY PER PRODUCT.

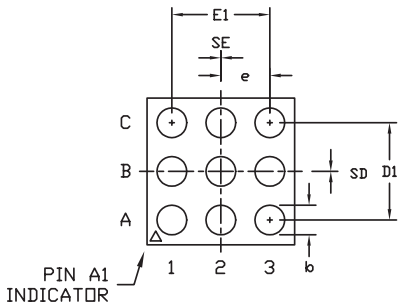

BOTTOM VIEW

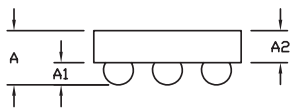

SIDE VIEW

DALLAS SEMICONDUCTOR MAXIM
PROPRIETARY INFORMATION

TITLE: PACKAGE OUTLINE, 3x3 UCSP

APPROVAL	DOCUMENT CONTROL NO.	REV.	
	21-0093	I	1/1

封装信息 (续)

(本数据资料提供的封装图可能不是最近的规格，如需最近的封装外型信息，请查询 **www.maxim-ic.com/packages**。)

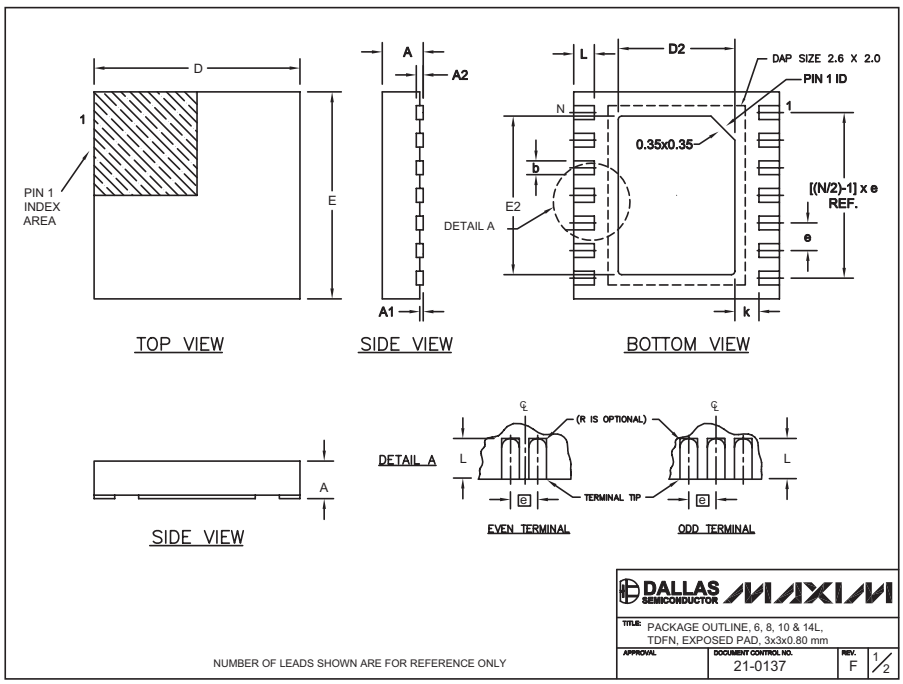

COMMON DIMENSIONS		
SYMBOL	MIN.	MAX.
A	0.70	0.80
D	2.90	3.10
E	2.90	3.10
A1	0.00	0.05
L	0.20	0.40
k	0.25 MIN.	
A2	0.20 REF.	

PACKAGE VARIATIONS							
PKG. CODE	N	D2	E2	e	JEDEC SPEC	b	[(N/2)-1] x e
T633-1	6	1.50±0.10	2.30±0.10	0.95 BSC	MO229 / WEEA	0.40±0.05	1.90 REF
T833-1	8	1.50±0.10	2.30±0.10	0.65 BSC	MO229 / WEEC	0.30±0.05	1.95 REF
T1033-1	10	1.50±0.10	2.30±0.10	0.50 BSC	MO229 / WEED-3	0.25±0.05	2.00 REF
T1433-1	14	1.70±0.10	2.30±0.10	0.40 BSC	- - - -	0.20±0.03	2.40 REF
T1433-2	14	1.70±0.10	2.30±0.10	0.40 BSC	- - - -	0.20±0.03	2.40 REF

NOTES:
1. ALL DIMENSIONS ARE IN mm. ANGLES IN DEGREES.
2. COPLANARITY SHALL NOT EXCEED 0.08 mm.
3. WARPAGE SHALL NOT EXCEED 0.10 mm.
4. PACKAGE LENGTH/PACKAGE WIDTH ARE CONSIDERED AS SPECIAL CHARACTERISTIC(S).
5. DRAWING CONFORMS TO JEDEC MO229, EXCEPT DIMENSIONS "D2" AND "E2", AND T1433-1 & T1433-2.
6. "N" IS THE TOTAL NUMBER OF LEADS.

DALLAS SEMICONDUCTOR MAXIM
TITLE: PACKAGE OUTLINE, 6, 8, 10 & 14L,
TDFN, EXPOSED PAD, 3x3x0.80 mm
APPROVAL | DOCUMENT CONTROL NO. 21-0137 | REV. F | 2/2

低成本、单声道/立体声、1.4W差分音频功率放大器

封装信息 (续)

(本数据资料提供的封装图可能不是最近的规格，如需最近的封装外型信息，请查询 **www.maxim-ic.com/packages**。)

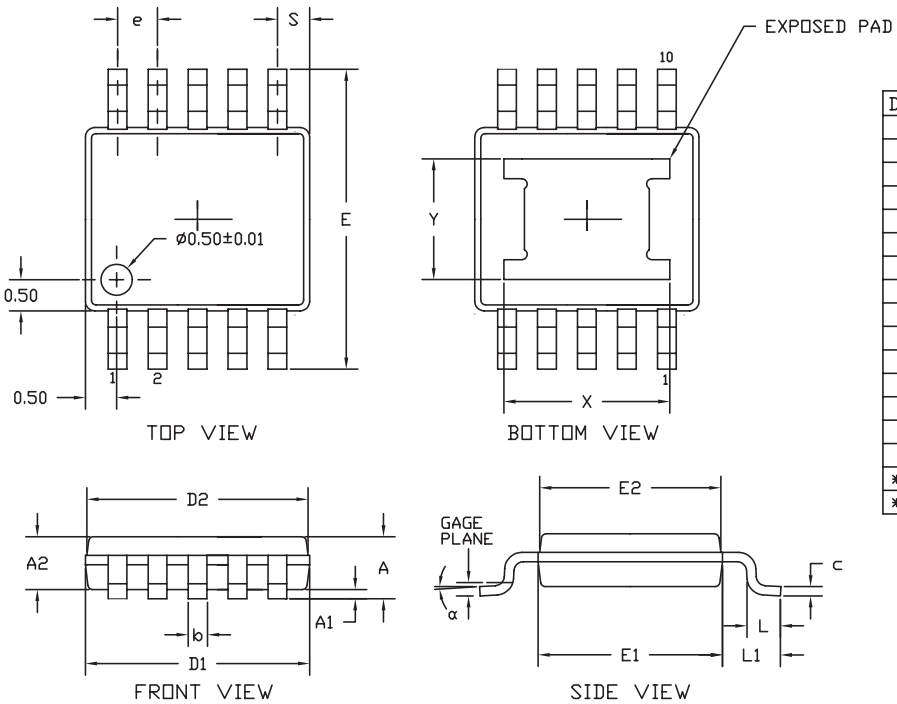

DIM	INCHES MIN	INCHES MAX	MILLIMETERS MIN	MILLIMETERS MAX
A	0.037	0.043	0.94	1.10
A1	0.002	0.006	0.05	0.15
A2	0.030	0.037	0.75	0.95
D1	0.116	0.120	2.95	3.05
D2	0.114	0.118	2.89	3.00
E1	0.116	0.120	2.95	3.05
E2	0.114	0.118	2.89	3.00
E	0.187	0.199	4.75	5.05
L	0.0157	0.0275	0.40	0.70
L1	0.037 REF		0.940 REF	
b	0.007	0.0106	0.177	0.270
e	0.0197 BSC		.500 BSC	
c	0.0035	0.0078	0.090	0.200
S	0.0196 REF		.498 REF	
α	0°	6°	0°	6°
*X	0.087	0.099	2.210	2.515
*Y	0.062	0.074	1.575	1.880

* EXPOSED PAD

NOTES:
1. D&E DO NOT INCLUDE MOLD FLASH.
2. MOLD FLASH OR PROTRUSIONS NOT TO EXCEED 0.15mm (.006").
3. CONTROLLING DIMENSION: MILLIMETERS.
4. EXPOSED PAD FLUSH WITH BOTTOM OF PACKAGE WITHIN .002".
5. MEETS JEDEC MO187.

MAXIM
PROPRIETARY INFORMATION
TITLE: PACKAGE OUTLINE, 10L uMAX, EXPOSED PAD
APPROVAL | DOCUMENT CONTROL NO. 21-0109 | REV B | 1/1

10L UMAX, EXPPADS.EPS

封装信息 (续)

(本数据资料提供的封装图可能不是最近的规格，如需最近的封装外型信息，请查询 **www.maxim-ic.com/packages**。)

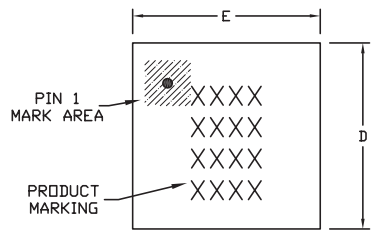

TOP VIEW

COMMON DIMENSIONS	
A	0.62+0.05−0.08
A1	0.29±0.02
A2	0.33 REF.
b	ø0.35±0.03
D1	1.50 BASIC
E1	1.50 BASIC
e	0.50 BASIC
SD	0.25 BASIC
SE	0.25 BASIC

PKG. CODE	VARIABLE DIMENSIONS		DEPOPULATED SOLDER BALLS
	D	E	
B16-1	2.02±0.05	2.02±0.05	NONE
B16-2	2.02±0.05	2.02±0.05	B3, C3
B16-3	2.02±0.05	2.02±0.05	B3, C2
B16-4	2.02±0.05	2.02±0.05	B2, C3
B16-5	2.02±0.05	2.02±0.05	B2, B3, C2, C3
B16-6	2.02±0.05	2.02±0.05	C3

16L,UCSP.EPS

NOTES:
1. ALL DIMENSIONS ARE IN MILLIMETERS.
2. PRODUCT MARKING: NUMBER OF CHARACTERS AND LINES VARY PER PRODUCT.

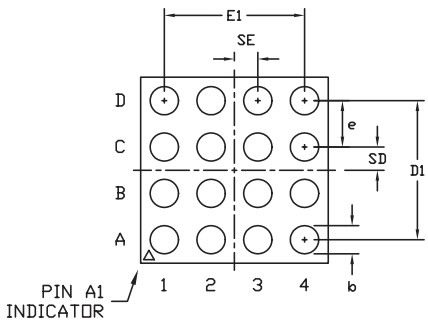

BOTTOM VIEW

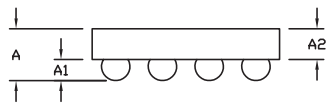

SIDE VIEW

DALLAS SEMICONDUCTOR MAXIM
PROPRIETARY INFORMATION

TITLE: PACKAGE OUTLINE, 4x4 UCSP

APPROVAL	DOCUMENT CONTROL NO.	REV.	
	21-0101	H	1/1

低成本、单声道/立体声、1.4W差分音频功率放大器

封装信息 (续)

(本数据资料提供的封装图可能不是最近的规格，如需最近的封装外型信息，请查询 **www.maxim-ic.com/packages**。)

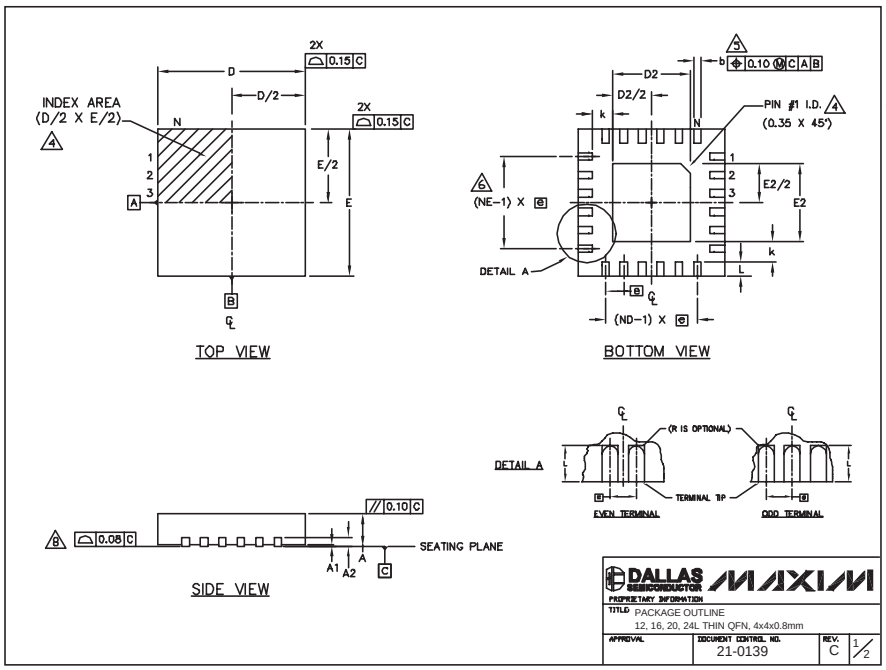

COMMON DIMENSIONS

PKG	12L 4x4			16L 4x4			20L 4x4			24L 4x4		
REF.	MIN.	NOM.	MAX.	MIN.	NOM.	MAX.	MIN.	NOM.	MAX.	MIN.	NOM.	MAX.
A	0.70	0.75	0.80	0.70	0.75	0.80	0.70	0.75	0.80	0.70	0.75	0.80
A1	0.0	0.02	0.05	0.0	0.02	0.05	0.0	0.02	0.05	0.0	0.02	0.05
A2	0.20 REF			0.20 REF			0.20 REF			0.20 REF		
b	0.25	0.30	0.35	0.25	0.30	0.35	0.20	0.25	0.30	0.18	0.23	0.30
D	3.90	4.00	4.10	3.90	4.00	4.10	3.90	4.00	4.10	3.90	4.00	4.10
E	3.90	4.00	4.10	3.90	4.00	4.10	3.90	4.00	4.10	3.90	4.00	4.10
e	0.80 BSC.			0.65 BSC.			0.50 BSC.			0.50 BSC.		
k	0.25	-	-	0.25	-	-	0.25	-	-	0.25	-	-
L	0.45	0.55	0.65	0.45	0.55	0.65	0.45	0.55	0.65	0.30	0.40	0.50
N	12			16			20			24		
ND	3			4			5			6		
NE	3			4			5			6		
Jedec Var.	WGGB			WGGC			WGGD-1			WGGD-2		

EXPOSED PAD VARIATIONS

PKG. CODES	D2			E2			DOWN BONDS ALLOWED
	MIN.	NOM.	MAX.	MIN.	NOM.	MAX.	
T1244-2	1.95	2.10	2.25	1.95	2.10	2.25	NO
T1244-3	1.95	2.10	2.25	1.95	2.10	2.25	YES
T1244-4	1.95	2.10	2.25	1.95	2.10	2.25	NO
T1644-2	1.95	2.10	2.25	1.95	2.10	2.25	NO
T1644-3	1.95	2.10	2.25	1.95	2.10	2.25	YES
T1644-4	1.95	2.10	2.25	1.95	2.10	2.25	NO
T2044-1	1.95	2.10	2.25	1.95	2.10	2.25	NO
T2044-2	1.95	2.10	2.25	1.95	2.10	2.25	YES
T2044-3	1.95	2.10	2.25	1.95	2.10	2.25	NO
T2444-1	2.45	2.60	2.63	2.45	2.60	2.63	NO
T2444-2	1.95	2.10	2.25	1.95	2.10	2.25	YES
T2444-3	2.45	2.60	2.63	2.45	2.60	2.63	YES
T2444-4	2.45	2.60	2.63	2.45	2.60	2.63	NO

NOTES:

1. DIMENSIONING & TOLERANCING CONFORM TO ASME Y14.5M-1994.
2. ALL DIMENSIONS ARE IN MILLIMETERS. ANGLES ARE IN DEGREES.
3. N IS THE TOTAL NUMBER OF TERMINALS.
4. THE TERMINAL #1 IDENTIFIER AND TERMINAL NUMBERING CONVENTION SHALL CONFORM TO JESD 95-1 SPP-012. DETAILS OF TERMINAL #1 IDENTIFIER ARE OPTIONAL, BUT MUST BE LOCATED WITHIN THE ZONE INDICATED. THE TERMINAL #1 IDENTIFIER MAY BE EITHER A MOLD OR MARKED FEATURE.
5. DIMENSION b APPLIES TO METALLIZED TERMINAL AND IS MEASURED BETWEEN 0.25 mm AND 0.30 mm FROM TERMINAL TIP.
6. ND AND NE REFER TO THE NUMBER OF TERMINALS ON EACH D AND E SIDE RESPECTIVELY.
7. DEPOPULATION IS POSSIBLE IN A SYMMETRICAL FASHION.
8. COPLANARITY APPLIES TO THE EXPOSED HEAT SINK SLUG AS WELL AS THE TERMINALS.
9. DRAWING CONFORMS TO JEDEC MO220, EXCEPT FOR T2444-1, T2444-3 AND T2444-4.

DALLAS SEMICONDUCTOR PROPRIETARY INFORMATION MAXIM
TITLE PACKAGE OUTLINE 12, 16, 20, 24L THIN QFN, 4x4x0.8mm
APPROVAL | DOCUMENT CONTROL NO. 21-0139 | REV. C | 2/2

封装信息 (续)

(本数据资料提供的封装图可能不是最近的规格，如需最近的封装外型信息，请查询 **www.maxim-ic.com/packages**。)

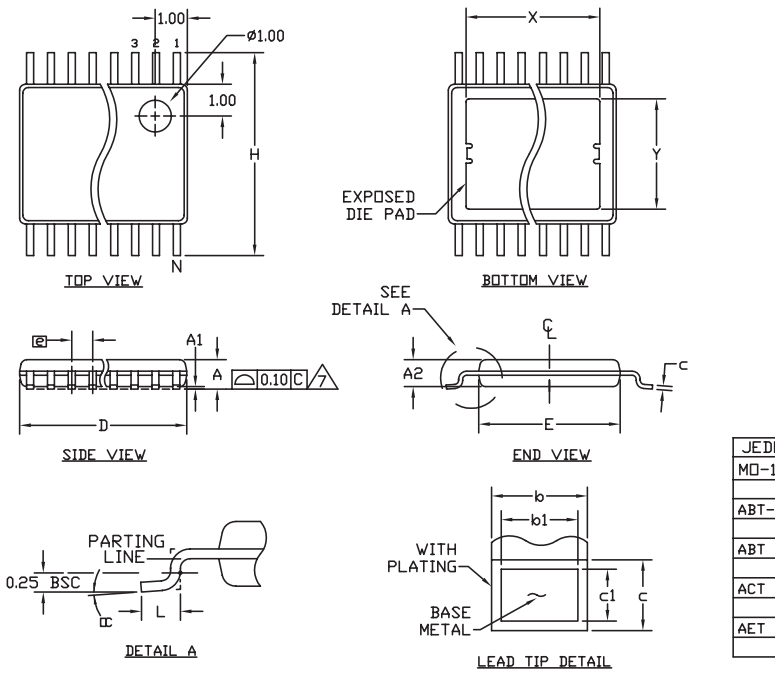

SYMBOL	COMMON DIMENSIONS			
	MILLIMETERS		INCHES	
	MIN.	MAX.	MIN.	MAX.
A	--	1.10	--	0.043
A1	0.05	0.15	0.002	0.006
A2	0.85	0.95	0.033	0.037
b	0.19	0.30	0.007	0.012
b1	0.19	0.25	0.007	0.010
c	0.090	0.20	0.004	0.008
c1	0.090	0.135	0.004	0.0053
D	SEE VARIATIONS		SEE VARIATIONS	
E	4.30	4.50	0.169	0.177
e	0.65 BSC		0.026 BSC	
H	6.25	6.50	0.246	0.256
L	0.50	0.70	0.020	0.028
N	SEE VARIATIONS		SEE VARIATIONS	
Y	2.85	3.15	0.112	0.124
α	0°	8°	0°	8°

JEDEC			VARIATIONS			
MO-153	N		MILLIMETERS		INCHES	
			MIN.	MAX.	MIN.	MAX.
ABT-1	14	D	4.90	5.10	0.193	0.201
		X	2.95	3.25	0.116	0.128
ABT	16	D	4.90	5.10	0.193	0.201
		X	2.85	3.15	0.112	0.124
ACT	20	D	6.40	6.60	0.252	0.260
		X	4.00	4.34	0.157	0.171
AET	28	D	9.60	9.80	0.378	0.386
		X	5.35	5.65	0.211	0.222

NOTES:
1. DIMENSIONS D AND E DO NOT INCLUDE FLASH.
2. MOLD FLASH OR PROTRUSIONS NOT TO EXCEED 0.15mm PER SIDE.
3. CONTROLLING DIMENSION: MILLIMETERS.
4. MEETS JEDEC OUTLINE MO-153. SEE JEDEC VARIATIONS TABLE.
5. "N" REFERS TO NUMBER OF LEADS.
6. EXPOSED PAD FLUSH WITH BOTTOM OF PACKAGE WITHIN .002".
7. THE LEAD TIPS MUST LIE WITHIN A SPECIFIED ZONE. THIS TOLERANCE ZONE IS DEFINED BY TWO PARALLEL PLANES. ONE PLANE IS THE SEATING PLANE, DATUM [-C-]; THE OTHER PLANE IS AT THE SPECIFIED DISTANCE FROM [-C-] IN THE DIRECTION INDICATED.

DALLAS SEMICONDUCTOR MAXIM
PROPRIETARY INFORMATION

TITLE: PACKAGE OUTLINE, TSSOP, 4.40 MM BODY EXPOSED PAD

APPROVAL	DOCUMENT CONTROL NO.	REV.	
	21-0108	D	1/1

TSSOP 4.4mm BODY.EPS

MAXIM北京办事处
北京8328信箱　邮政编码100083
免费电话：800 810 0310
电话：010-6201 0598
传真：010-6201 0298

Maxim不对Maxim产品以外的任何电路使用负责，也不提供其专利许可。Maxim保留在任何时间、没有任何通报的前提下修改产品资料和规格的权利。

© 2004 Maxim Integrated Products　　Printed USA　　MAXIM 是 Maxim Integrated Products, Inc. 的一个注册商标。