Series 121 / 122 / 123 / 124

Dual-in-line sockets
Open frame
Wire-wrap 1 / 2 / 3 / 4 level

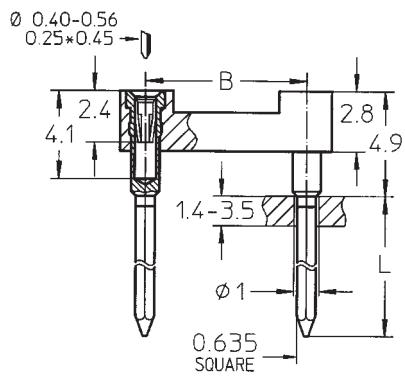

Solderless wire-wrap terminals are firmly locked in the insulator body to withstand torque of wrapping tool

Length of terminal for
one-level wrapping
two-level wrapping
three-level wrapping
four-level wrapping

Insertion characteristics:
4-finger standard

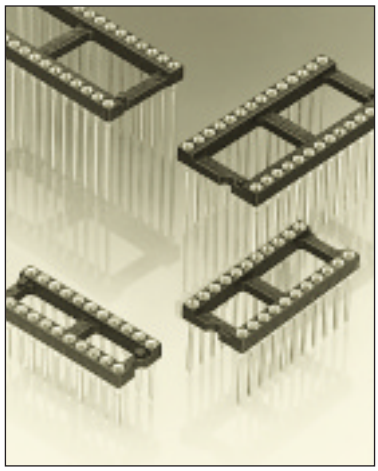

Platings	Sleeve	Clip	Pin
13	0.25 µm Au	0.75 µm Au	
91	5 µm Sn Pb	0.25 µm Au	
93	5 µm Sn Pb	0.75 µm Au	
99	5 µm Sn Pb	5 µm Sn Pb	

Ordering information
For standard versions see table (order codes)

Platings available:
Series 121: 93 122: 13, 91, 93, 99
123: 13, 91, 93, 99 124: 93

Replace **xx** with required plating code

No. of poles	Order Codes					Insulator dimensions			
	Plating: see ordering information								
	WW-1 level B L = 6.6 mm	WW-2 levels B L = 9.40 mm	WW-3 levels L = 12.95 mm	WW-4 levels B L = 16 mm		See page 50	A	B	C
10	121-93-210-41-001	122-xx-210-41-001	123-xx-210-41-001	124-93-210-41-002		Fig. 1	12.6	5.08	7.6
4	121-93-304-41-001	122-xx-304-41-001	123-xx-304-41-001	124-93-304-41-002		Fig. 2	5.0	7.62	10.1
6	121-93-306-41-001	122-xx-306-41-001	123-xx-306-41-001	124-93-306-41-002		Fig. 3	7.6	7.62	10.1
8	121-93-308-41-001	122-xx-308-41-001	123-xx-308-41-001	124-93-308-41-002		Fig. 4	10.1	7.62	10.1
10	121-93-310-41-001	122-xx-310-41-001	123-xx-310-41-001	124-93-310-41-002		Fig. 5	12.6	7.62	10.1
12	121-93-312-41-001	122-xx-312-41-001	123-xx-312-41-001	124-93-312-41-002		Fig. 5a	15.2	7.62	10.1
14	121-93-314-41-001	122-xx-314-41-001	123-xx-314-41-001	124-93-314-41-002		Fig. 6	17.7	7.62	10.1
16	121-93-316-41-001	122-xx-316-41-001	123-xx-316-41-001	124-93-316-41-002		Fig. 7	20.3	7.62	10.1
18	121-93-318-41-001	122-xx-318-41-001	123-xx-318-41-001	124-93-318-41-002		Fig. 8	22.8	7.62	10.1
20	121-93-320-41-001	122-xx-320-41-001	123-xx-320-41-001	124-93-320-41-002		Fig. 9	25.3	7.62	10.1
22	121-93-322-41-001	122-xx-322-41-001	123-xx-322-41-001	124-93-322-41-002		Fig. 10	27.8	7.62	10.1
24	121-93-324-41-001	122-xx-324-41-001	123-xx-324-41-001	124-93-324-41-002		Fig. 11	30.4	7.62	10.1
28	121-93-328-41-001	122-xx-328-41-001	123-xx-328-41-001	124-93-328-41-002		Fig. 12	35.5	7.62	10.1
20	121-93-420-41-001	122-xx-420-41-001	123-xx-420-41-001	124-93-420-41-002		Fig. 12a	25.3	10.16	12.6
22	121-93-422-41-001	122-xx-422-41-001	123-xx-422-41-001	124-93-422-41-002		Fig. 13	27.8	10.16	12.6
24	121-93-424-41-001	122-xx-424-41-001	123-xx-424-41-001	124-93-424-41-002		Fig. 14	30.4	10.16	12.6
28	121-93-428-41-001	122-xx-428-41-001	123-xx-428-41-001	124-93-428-41-002		Fig. 15	35.5	10.16	12.6
32	121-93-432-41-001	122-xx-432-41-001	123-xx-432-41-001	124-93-432-41-002		Fig. 16	40.6	10.16	12.6
10	121-93-610-41-001	122-xx-610-41-001	123-xx-610-41-001	124-93-610-41-001		Fig. 16a	12.6	15.24	17.7
24	121-93-624-41-001	122-xx-624-41-001	123-xx-624-41-001	124-93-624-41-002		Fig. 17	30.4	15.24	17.7
28	121-93-628-41-001	122-xx-628-41-001	123-xx-628-41-001	124-93-628-41-002		Fig. 18	35.5	15.24	17.7
32	121-93-632-41-001	122-xx-632-41-001	123-xx-632-41-001	124-93-632-41-002		Fig. 19	40.6	15.24	17.7
36	121-93-636-41-001	122-xx-636-41-001	123-xx-636-41-001	124-93-636-41-002		Fig. 20	45.7	15.24	17.7
40	121-93-640-41-001	122-xx-640-41-001	123-xx-640-41-001	124-93-640-41-002		Fig. 21	50.6	15.24	17.7
42	121-93-642-41-001	122-xx-642-41-001	123-xx-642-41-001	124-93-642-41-002		Fig. 22	53.2	15.24	17.7
48	121-93-648-41-001	122-xx-648-41-001	123-xx-648-41-001	124-93-648-41-002		Fig. 23	60.9	15.24	17.7
50	121-93-650-41-001	122-xx-650-41-001	123-xx-650-41-001	124-93-650-41-002		Fig. 24	63.4	15.24	17.7
52	121-93-652-41-001	122-xx-652-41-001	123-xx-652-41-001	124-93-652-41-002		Fig. 25	65.9	15.24	17.7
50	121-93-950-41-001	122-xx-950-41-001	123-xx-950-41-001	124-93-950-41-002		Fig. 26	63.4	22.86	25.3
52	121-93-952-41-001	122-xx-952-41-001	123-xx-952-41-001	124-93-952-41-002		Fig. 27	65.9	22.86	25.3
64	121-93-964-41-001	122-xx-964-41-001	123-xx-964-41-001	124-93-964-41-002		Fig. 28	81.1	22.86	25.3

B Products not available from stock. Please consult PRECI-DIP.