MITSUBISHI Nch POWER MOSFET

FS14SM-18A

HIGH-SPEED SWITCHING USE

FS14SM-18A

- V_{DSS} 900V
- r_{DS} (ON) (MAX) 0.85Ω
- I_D 14A

OUTLINE DRAWING Dimensions in mm

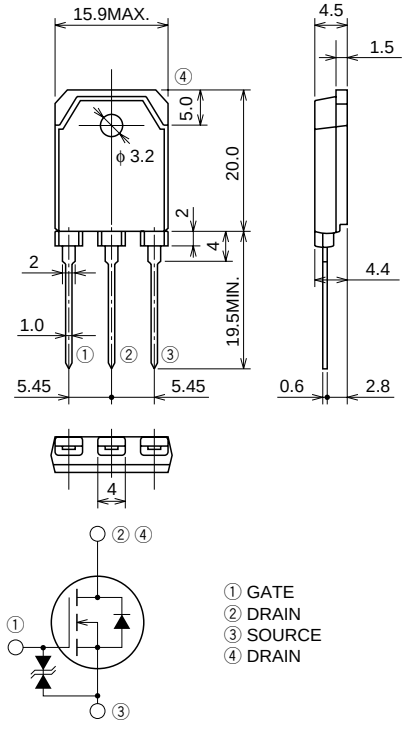

TO-3P

APPLICATION

SMPS, DC-DC Converter, battery charger, power supply of printer, copier, HDD, FDD, TV, VCR, personal computer etc.

MAXIMUM RATINGS (T_C = 25°C)

Symbol	Parameter	Conditions	Ratings	Unit
V_{DSS}	Drain-source voltage	V_{GS} = 0V	900	V
V_{GSS}	Gate-source voltage	V_{DS} = 0V	±30	V
I_D	Drain current		14	A
I_{DM}	Drain current (Pulsed)		42	A
P_D	Maximum power dissipation		275	W
T_{ch}	Channel temperature		–55 ~ +150	°C
T_{stg}	Storage temperature		–55 ~ +150	°C
—	Weight	Typical value	4.8	g