Features

1.Uni-directional data transmission using plastic fiber
2.Signal transmission speed :MAX. 13.2Mbps (NRZ signal)
3.Operating voltage :2.75 to 5.25 V
4.TTL and high speed C-MOS LOGIC IC compatible

Outline Dimensions

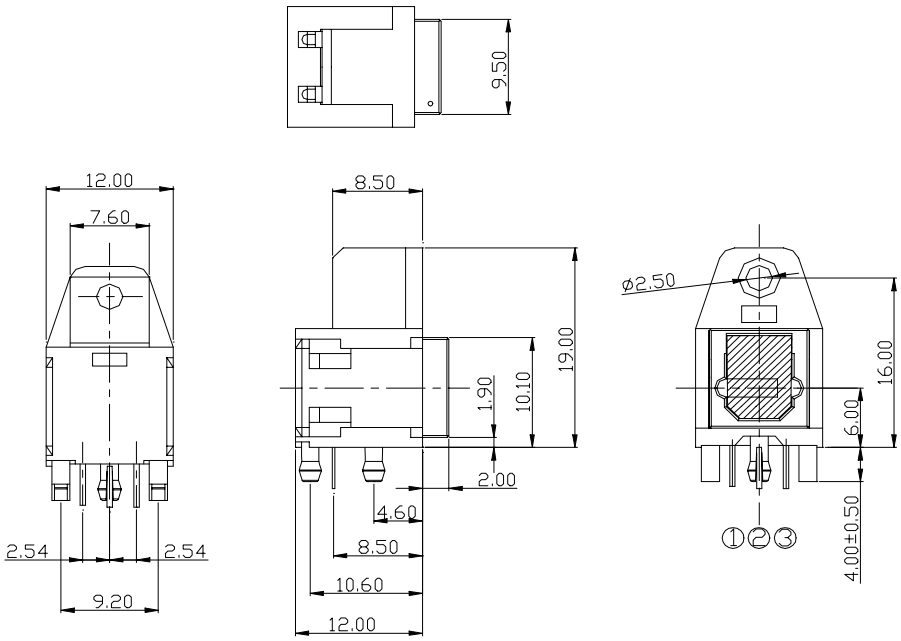

Recommended drilling as viewd from the soldering face

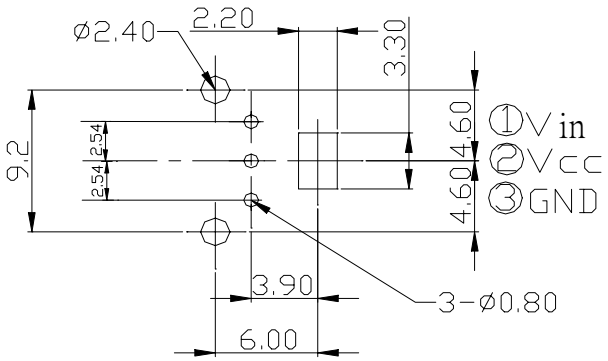

NOTES:

Tolerance is ±0.3mm unless otherwise noted.

Absolute Maximum Ratings

@TA=25°C

Parameter	Symbol	Rating	Unit
Supply voltage	V_{cc}	-0.5 to + 7.0	V
Input voltage	V_{in}	-0.5 to Vcc +0.5	V
Operating temperature	T_{opr}	-20 to +70	°C
Storage temperature	T_{stg}	-30 to +80	°C
Soldering temperature *1	T_{sol}	260	°C

*1 For 5s (2 times or less)

Recommended Operating Conditions

Parameter	Symbol	MIN.	TYP.	MAX.	Unit
Operating supply voltage	V_{cc}	2.75	---	5.25	V
Operating transfer rate	T	---	---	13.2	Mbps

Electro-Optical Characteristics

Parameter	Symbol	Conditions	MIN.	TYP.	MAX.	Unit
Peak emission wavelength	λ_p		630	660	690	nm
Optical power output coupling with fiber	P_c	Refer to Fig. 1	-21	-18	-15	dBm
Dissipation current	I_{cc}	Refer to Fig. 2	---	8	13	mA
High level input voltage	V_{iH}	Refer to Fig. 2	2.1	---	V_{cc}	V
Low level input voltage	V_{iL}	Refer to Fig. 2	---	---	0.8	V
Low →High delay time	t_{pLH}	Refer to Fig. 3	---	100	180	ns
High →Low delay time	t_{pHL}	Refer to Fig. 3	---	100	180	ns
Pulse width distortion	Δ_{tw}	Refer to Fig. 3	-15	---	+15	ns

Fig. 1 Measuring Method of Optical Output Coupling with Fiber

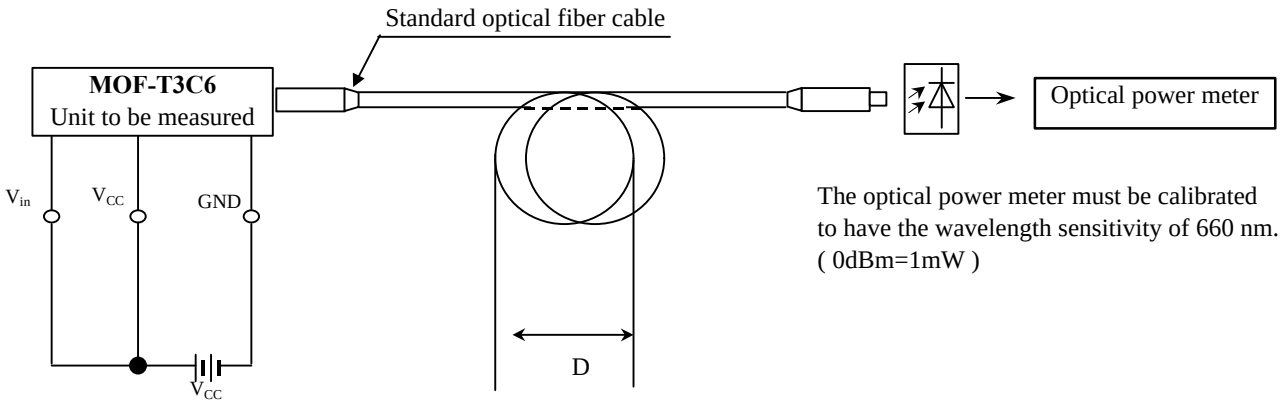

Notes (1)Vcc=5.0V (State of operating)
(2)To bundle up the standard fiber optic cable, make it into a loop with the diameter D=10cm or more.

Fig. 2 Measuring Method of Intput Voltage and Supply Current

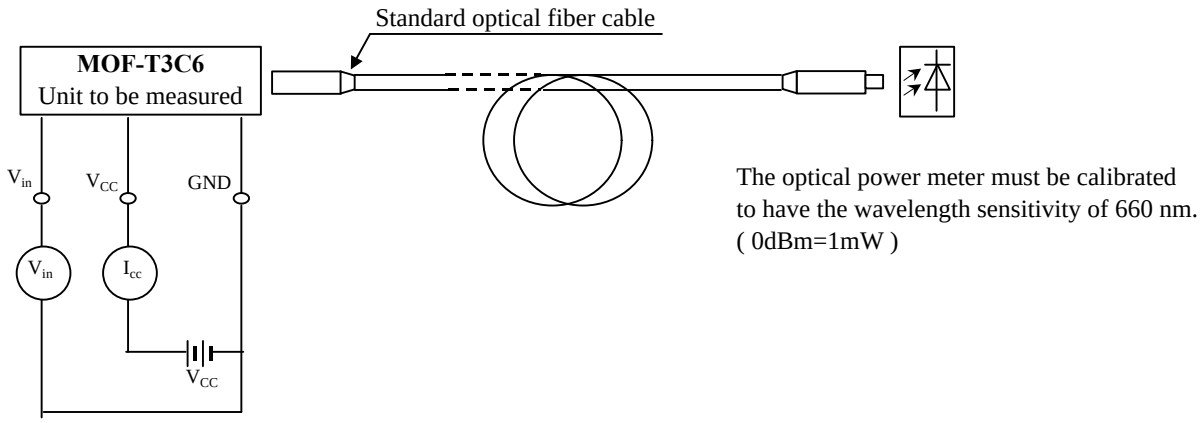

Input conditions and judgement method

Conditions	Judgement method
V_{in}=2.1V or more	-21dBm<=Pc<=-15dBm, Icc=13mA or less
V_{in}=0.8V or less	Pc<=-36dBm, Icc=13mA or less

Note: V_{cc}=5.0V (State of operating)

Fig.3 Measuring Method of Pulse Response

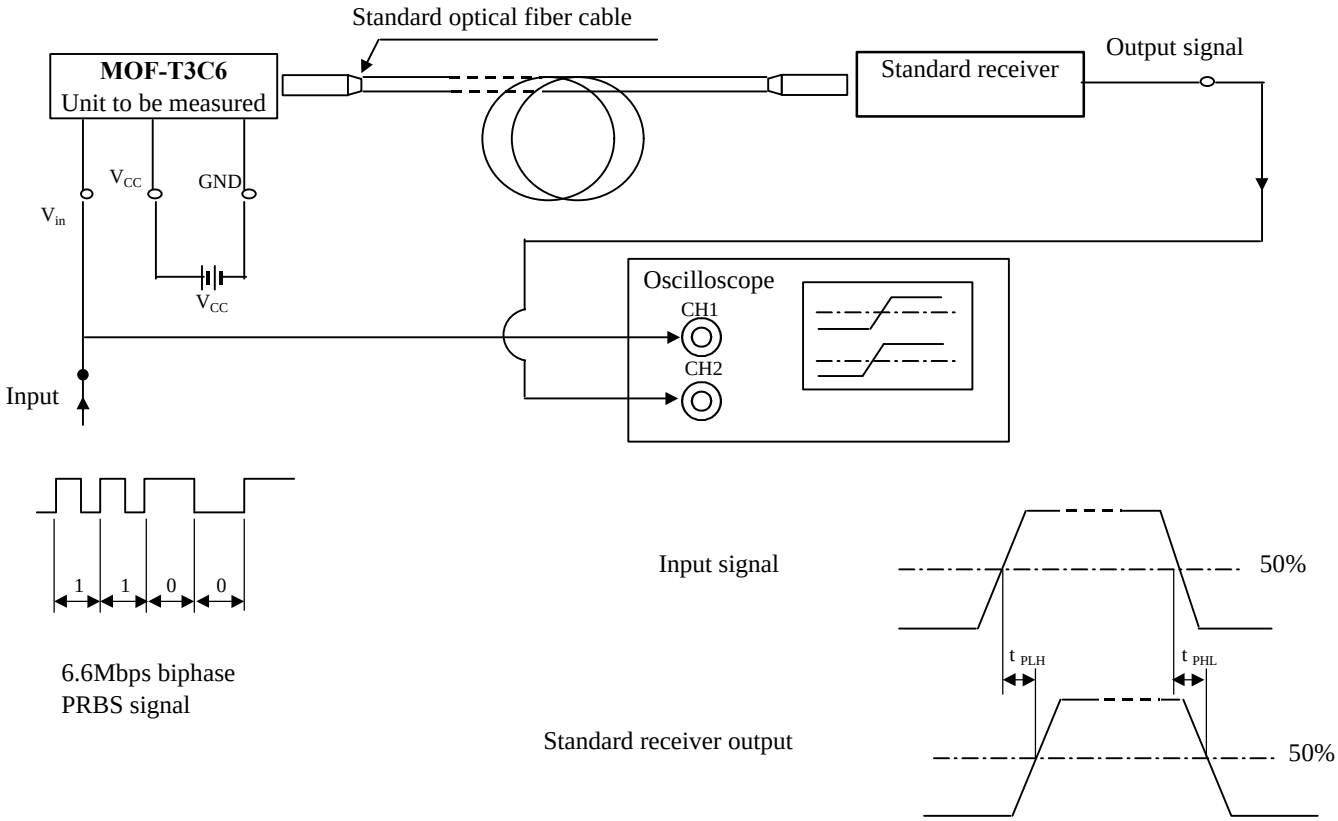

Test item

Test item	Symbol	Test condition
Low →High pulse delay time	t_{PLH}	Refer to the above prescriptions
High →Low pulse delay time	t_{PHL}	Refer to the above prescriptions
Pulse width distortion	Δtw	$\Delta tw = t_{PHL} - t_{PLH}$

Notes (1) The waveform write time shall be 4 seconds. But do not allow the waveform to be distorted by increasing the brightness too much.

(2) Vcc=5.0 V (State of operating)

(3) The probe for the oscilloscope must be more than 1M and less than 10pF.